Turn to the experts

Product Data

AquaForce®

Condenserless and Water-Cooled Liquid Chillers

75 to 265 Nominal Tons
(264 to 931 Nominal kW)

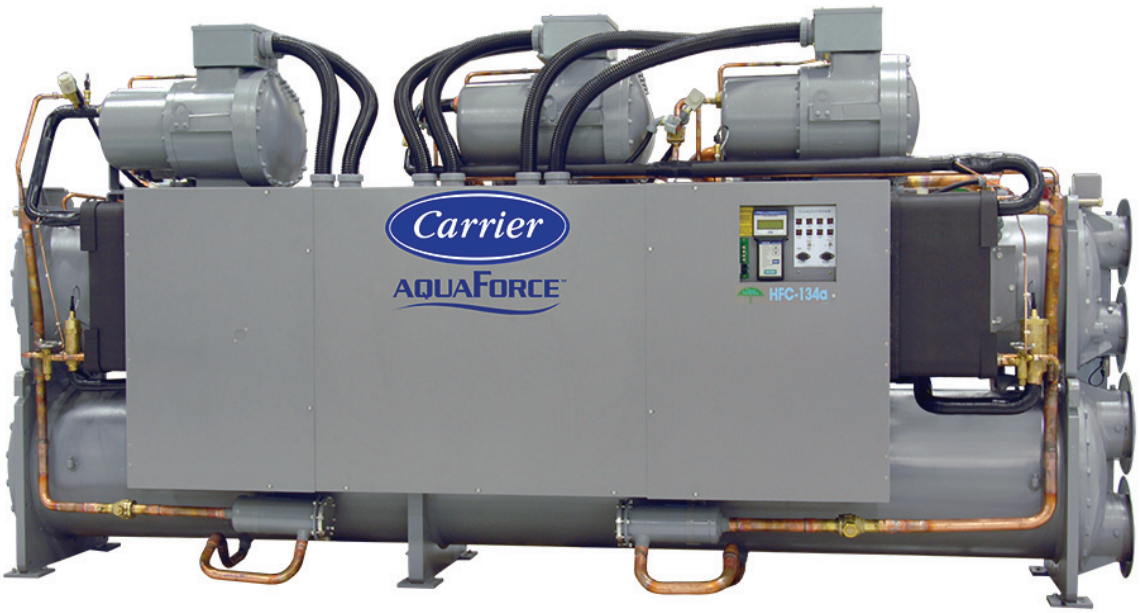

30HXA,HXC076-271
Condenserless and Water-Cooled Liquid Chillers
with *Comfort*Link Controls

© 2020 Carrier

Features/Benefits

Quality design and construction make the 30HXC (water-cooled) and 30HXA (condenserless) units the preferred chillers.

Water-cooled and condenserless chillers designed from the ground up to meet the needs of today and tomorrow:

- Unit fits through a standard door with no disassembly required
- Chlorine-free HFC-134a refrigerant
- Dual, independent refrigerant circuits
- Smooth compression using twin screw compressors
- AHRI certified IPLV efficiencies as low as 0.51 kW/ton

Easy installation

The 30HX chiller has a compact design that fits through a standard door opening and requires minimal indoor space. The 30HX chiller is delivered as a complete package for easy installation. There are no extra controls, clocks, starters, or other items to install.

The 30HX unit also provides a single location electrical power entrance (using the accessory field-installed control power transformer) and quick, easy piping (using Victaulic-type clamp-on couplings).

The 30HX 208/230-v, 230-v, 460-v, and 575-v 60 Hz units are designed in accordance with UL (Underwriters Laboratory, U.S.A.) and UL, Canada (Underwriters Laboratory, Canada) standards to minimize electrical inspection time.

A quick start-up is assured once installation is complete, since the management system governing the manufacture of each 30HX unit is ISO (International Organization for Standardization) 9001:2015 certified to guarantee quality. In addition, all 30HXC units are tested under load at the factory to provide reliable start-up.

NOTE: The 30HXC units shipped with optional nitrogen charge are tested for proper operation of the electrical components but are not run-tested at the factory.

Easy operation

The 30HX units have a quiet, low-vibration design featuring screw compressors.

Efficiency levels of the 30HX units meet or exceed energy efficiency requirements of ASHRAE (American Society of Heating, Refrigerating and Air-Conditioning Engineers) 90.1-2019 and CSA (Canadian Standards Association) for both full load and part load operation, thus saving on operating costs through lower electrical costs. All 30HX units are also rated in accordance with AHRI (Air-Conditioning, Heating, and Refrigeration Institute, U.S.A.) standards. The 60 Hz 30HXC units are AHRI certified.

The 30HX controls are fully automatic. The leaving-fluid temperature is directly controlled to within 0.5°F (0.3°C), and the entering-fluid temperature is continuously monitored to detect load and flow changes.

Dual, independent refrigerant circuits provide reliable, dependable cooling, and the 30HX units use medium-pressure HFC-134a refrigerant to minimize stress on the compressors and ensure a long life.

From a service standpoint, the 30HX units offer the following features:

- Use of HFC-134a refrigerant, which has no planned phase-out in its future
- Mechanically cleanable evaporator and condenser (30HXC units)
- Twin-screw compressors, which require no routine service or maintenance
- Easily accessed service information includes suction and discharge pressure and temperature using standard Navigator™ display module
- All parts are available through Totaline parts stores.

*Comfort*Link controls

*Comfort*Link controls allow simple and easy interface to chillers with outstanding performance and value. The 30HX liquid chillers employ more than the latest advanced microprocessor controls; they utilize an expandable platform that can adjust as needs change. *Comfort*Link controls are used in diverse applications from stand-alone operation to remotely monitored and operated multi-chiller plants.

*Comfort*Link controls are fully communicating and are cable-ready for connection to a Carrier Comfort Network® (CCN) system. Occupancy scheduling, temperature and pressure read-outs, optional sensors, and the *Comfort*Link scrolling marquee clear language display features provide a connection to a world of carefree comfort.

A BACnet[1] communication option is also available for the i-Vu® Open control system or a BACnet building automation system.

1. BACnet is a registered trademark of ASHRAE (American Society of Heating, Refrigerating, and Air-Conditioning Engineers).

Table of contents

	Page
Features/Benefits	2
Model Number Nomenclature	4
Physical Data	5
Options and Accessories	9
Dimensions	11
Application Data	21
Selection Procedure	30
Performance Data	31
Typical Piping and Wiring	33
Typical Control Wiring Schematic	35
Electrical Data	36
Controls	48
Guide Specifications	49

DUAL INDEPENDENT REFRIGERANT CIRCUITS

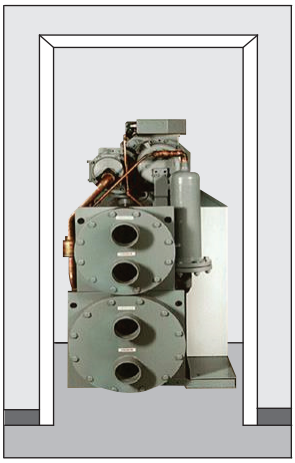

FITS THROUGH STANDARD DOORWAY

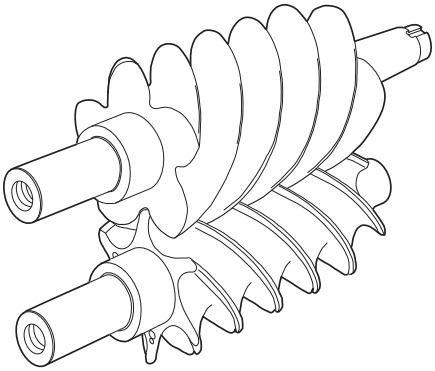

TWIN-SCREW COMPRESSOR DESIGN

NAVIGATOR MODULE IN DISPLAY MODE

Model number nomenclature

30HXC 076 R - - 6 7 1 AA

30HXA – Condenserless Liquid Chiller
30HXC – Water-Cooled Liquid Chiller

Nominal Size

076	126	186
086	136	206
096	146	246
106	161	261
116	171	271

Refrigerant/Evaporator Options
L – Nitrogen with Minus 1-Pass Evaporator
M – R-134a with Minus 1-Pass Evaporator
N – Nitrogen with Standard Evaporator
P – R-134a with Plus1-Pass Evaporator
Q – Nitrogen with Plus1-Pass Evaporator
R – R-134a with Standard Evaporator

Electrical Options
- – Across the Line Start
A – Non-Fused Disconnect
Y – Y-Delta Starter
Z – Y-Delta and Non-Fused Disconnect

Factory-Installed Option Codes*
AA – 1
BA – 2
CA – 3
KA – 1,2
LA – 1,3
TA – 2,3
ZB – 1,2,3

Packaging Code
1 = Standard Domestic
2 = Standard Export

Series

Voltage
1 – 575-3-60
2 – 380-3-60
4 – 230-3-60
5 – 208/230-3-60
6 – 460-3-60
9 – 380/415-3-50

Control Options
- – Standard
E – Navigator Display with Energy Management
U – BACnet Communication Option
W – Energy Management Option and BACnet Communication Option

*Option Code Descriptions:
1 = Minimum Load Control
2 = Suction Service Valve
3 = Medium Temperature Brine

SEISMICOMPLIANT*

* Meets IBC 2006, ASCE-7-05, CBC 2007, and OSHPD seismic requirements.

Quality Assurance
9001:2015-certified processes

ASHRAE 90.1 COMPLIANT

Physical data

ENGLISH

UNIT SIZE 30HX	076	086	096	106	116	126	136	146
UNIT OPERATING WEIGHT (lb)								
Water-Cooled (HXC)*	5720	5743	5875	6197	6435	6485	6708	6738
Condenserless (HXA)	4717	4744	4835	5151	5163	5205	5309	5333
COMPRESSORS	Semi-Hermetic, Twin Screw							
Quantity	2	2	2	2	2	2	2	2
Nominal Capacity per Compressor (tons)	39/39	46/39	56/39	66/39	66/46	66/56	80/56	80/66
Economizer	No	No	No	No	No	No	No	No
No. Capacity Steps								
30HXC Unit	6	6	6	6	6	6	6	6
30HXA Unit (maximum on 30HXC unit with factory-installed option)	8	8	8	8	8	8	8	8
Minimum Step Capacity (%)								
30HXC Unit	20	20	20	20	20	20	20	20
30HXA Unit (30HXC unit with factory-installed option)	10	10	10	10	10	10	10	10
REFRIGERANT (HXC)	R-134a							
Charge† (lb) Circuit A/Circuit B**	85/85	86/85	104/80	120/80	122/99	122/99	134/99	129/110
EVAPORATOR	Shell and Tube with Enhanced Copper Tubes							
Part No. 10HX400-	401	401	402	408	406	406	405	405
Net Fluid Volume (gal)	17.0	17.0	19.0	22.6	21.4	21.4	24.0	24.0
Maximum Refrigerant Pressure (psig)	220	220	220	220	220	220	220	220
Maximum Water-Side Pressure (psig)	300	300	300	300	300	300	300	300
Water Connections (in.)								
Inlet and Outlet (Std Pass)	4	4	4	5	5	5	5	5
Drain (NPT) (Std Pass)	3/8	3/8	3/8	3/8	3/8	3/8	3/8	3/8
Relief Valve								
Connection (in. NPTF)	3/4	3/4	3/4	3/4	3/4	3/4	3/4	3/4
Flow Capacity (lb air/min)	31.7	31.7	31.7	31.7	31.7	31.7	31.7	31.7
Relief Setting (psig)	220	220	220	220	220	220	220	220
Standard Number of Passes	3	3	3	3	2	2	2	2
OIL SEPARATOR (HXA)								
Part No. 09RX400-	217	217	216	216	215	215	215	215
Maximum Refrigerant Pressure (psig)	320	320	320	320	320	320	320	320
Refrigerant Connections (in.)								
Discharge Circuit A/Circuit B	2 1/8 / 2 1/8	2 1/8 / 2 1/8	2 1/8 / 2 1/8	2 1/8 / 2 1/8	2 1/8 / 2 1/8	2 1/8 / 2 1/8	2 1/8 / 2 1/8	2 1/8 / 2 1/8
Liquid Circuit A/Circuit B	1 1/8 / 1 1/8	1 1/8 / 1 1/8	1 1/8 / 1 1/8	1 1/8 / 1 1/8	1 1/8 / 1 1/8	1 1/8 / 1 1/8	1 1/8 / 1 1/8	1 1/8 / 1 1/8
Relief Valve								
Connection (in. SAE Flare)	5/8	5/8	5/8	5/8	5/8	5/8	5/8	5/8
Flow Capacity (lb air/min)	21.6	21.6	21.6	21.6	21.6	21.6	21.6	21.6
Relief Setting (psig)	320	320	320	320	320	320	320	320
CONDENSER (HXC)	Shell and Tube with Enhanced Copper Tubes							
Part No. 09RX400-	257	257	258	258	259	259	260	260
Net Fluid Volume (gal)	16.8	16.8	18.3	18.3	23.9	23.9	27.5	27.5
Maximum Refrigerant Pressure (psig)	220	220	220	220	220	220	220	220
Maximum Water-Side Pressure (psig)	300	300	300	300	300	300	300	300
Water Connections (in.)	Victaulic Type Connection							
Inlet and Outlet (Std Pass)	5	5	5	5	5	5	5	5
Drain (NPT) (Std Pass)	3/8	3/8	3/8	3/8	3/8	3/8	3/8	3/8
Relief Valve								
Connection (in. NPTF)	3/4	3/4	3/4	3/4	3/4	3/4	3/4	3/4
Flow Capacity (lb air/min)	31.7	31.7	31.7	31.7	31.7	31.7	31.7	31.7
Relief Setting (psig)	220	220	220	220	220	220	220	220
Standard Number of Passes	2	2	2	2	2	2	2	2
DISCHARGE LINE††								
Relief Valve								
Connection (in. SAE Flare)	3/8	3/8	3/8	3/8	3/8	3/8	3/8	3/8
Flow Capacity (lb air/min)	6.3	6.3	6.3	6.3	6.3	6.3	6.3	6.3
Setting (psig)	350	350	350	350	350	350	350	350

LEGEND

NPTF — National Pipe Thread Female
SAE — Society of Automotive Engineers

* The 30HX water-cooled chiller products for Canada are limited in use to water systems to having a maximum pressure rating of 250 psig (1,724 kPa) and a temperature rating of 150°F (65.6°C).

† Charges listed are for 30HXC units. The 30HXA units are shipped with a holding charge only. To determine the refrigerant charge requirements for 30HXA units, see the 30HXA Estimated System Refrigerant Charge table in the Refrigerant Charge section on page 29.

** For 30HXC,HXA units utilizing brine, the unit may require more refrigerant than what is supplied. Additional refrigerant must be field supplied.

†† Only on units with factory-installed suction service valves.

Physical data (cont)

ENGLISH (cont)

UNIT SIZE 30HX	161	171	186	206	246	261	271
UNIT OPERATING WEIGHT (lb)							
Water-Cooled (HXC)*	7583	7959	7959	10,700	11,114	11,167	11,204
Condenserless (HXA)	5752	5777	5946	7,485	7,621	7,621	7,621
COMPRESSORS	Semi-Hermetic, Twin Screw						
Quantity	2	2	2	3	3	3	3
Nominal Capacity per Compressor (tons)	80/56	66/80	80/80	66/39/80	80/56/80	80/66/80	80/80/80
Economizer	Yes	Yes	Yes	Yes	Yes	Yes	Yes
No. Capacity Steps							
30HXC Unit	6	6	6	8	8	8	8
30HXA Unit (maximum on 30HXC unit with factory-installed option)	8	8	8	11	11	11	11
Minimum Step Capacity (%)							
30HXC Unit	20	20	20	13	13	13	13
30HXA Unit (30HXC unit with factory-installed option)	10	10	10	7	7	7	7
REFRIGERANT (HXC)	R-134a						
Charge† (lb) Circuit A/Circuit B**	172/125	134/155	150/150	215/150	235/150	235/150	235/150
EVAPORATOR TYPE	Shell and Tube with Enhanced Copper Tubes						
Part No. 10HX400-	601	621	621	631	634	634	634
Net Fluid Volume (gal)	33.4	28.5	33.4	43.1	47.2	47.2	47.2
Maximum Refrigerant Pressure (psig)	220	220	220	220	220	220	220
Maximum Water-Side Pressure (psig)	300	300	300	300	300	300	300
Water Connections (in.)							
Inlet and Outlet (Std Pass)	5	5	5	6	6	6	6
Drain (NPT) (Std Pass)	3/8	3/8	3/8	3/8	3/8	3/8	3/8
Relief Valve							
Connection (in. NPTF)	3/4	3/4	3/4	3/4	3/4	3/4	3/4
Flow Capacity (lb air/min)	31.7	31.7	31.7	31.7	31.7	31.7	31.7
Relief Setting (psig)	220	220	220	220	220	220	220
Standard Number of Passes	2	2	2	2	2	2	2
OIL SEPARATOR (HXA)							
Part No. 09RX400-	215	214	214	213	213	213	213
Maximum Refrigerant Pressure (psig)	320	320	320	320	320	320	320
Refrigerant Connections (in.)							
Discharge Circuit A/Circuit B	2 1/8 / 2 1/8	2 1/8 / 2 1/8	2 1/8 / 2 1/8	(2) 2 1/8 / 2 1/8	(2) 2 1/8 / 2 1/8	(2) 2 1/8 / 2 1/8	(2) 2 1/8 / 2 1/8
Liquid Circuit A/Circuit B	1 3/8 / 1 3/8	1 3/8 / 1 3/8	1 3/8 / 1 3/8	1 5/8 / 1 3/8	1 5/8 / 1 3/8	1 5/8 / 1 3/8	1 5/8 / 1 3/8
Relief Valve							
Connection (in. SAE Flare)	5/8	5/8	5/8	5/8	5/8	5/8	5/8
Flow Capacity (lb air/min)	21.6	21.6	21.6	21.6	21.6	21.6	21.6
Relief Setting (psig)	320	320	320	320	320	320	320
CONDENSER (HXC)	Shell and Tube with Enhanced Copper Tubes						
Part No. 09RX405-	261	262	262	263	264	264	264
Net Fluid Volume (gal)	33.0	38.8	38.8	48.8	57.8	57.8	57.8
Maximum Refrigerant Pressure (psig)	220	220	220	220	220	220	220
Maximum Water-Side Pressure (psig)	300	300	300	300	300	300	300
Water Connections (in.)	Victaulic Type Connection						
Inlet and Outlet (Std Pass)	6	6	6	8	8	8	8
Drain (NPT) (Std Pass)	3/8	3/8	3/8	3/8	3/8	3/8	3/8
Relief Valve							
Connection (in. NPTF)	3/4	3/4	3/4	3/4	3/4	3/4	3/4
Flow Capacity (lb air/min)	31.7	31.7	31.7	31.7	31.7	31.7	31.7
Relief Setting (psig)	220	220	220	220	220	220	220
Standard Number of Passes	2	2	2	2	2	2	2
DISCHARGE LINE††							
Relief Valve							
Connection (in. SAE Flare)	3/8	3/8	3/8	3/8	3/8	3/8	3/8
Flow Capacity (lb air/min)	6.3	6.3	6.3	6.3	6.3	6.3	6.3
Setting (psig)	350	350	350	350	350	350	350

LEGEND

NPTF — National Pipe Thread Female
SAE — Society of Automotive Engineers

* The 30HX water-cooled chiller products for Canada are limited in use to water systems to having a maximum pressure rating of 250 psig (1,724 kPa) and a temperature rating of 150°F (65.6°C).

† Charges listed are for 30HXC units. The 30HXA units are shipped with a holding charge only. To determine the refrigerant charge requirements for 30HXA units, see the 30HXA Estimated System Refrigerant Charge table in the Refrigerant Charge section on page 29.

** For 30HXC,HXA units utilizing brine, the unit may require more refrigerant than what is supplied. Additional refrigerant must be field supplied.

†† Only on units with factory-installed suction service valves.

SI

UNIT SIZE 30HX	076	086	096	106	116	126	136	146
UNIT OPERATING WEIGHT (kg)								
Water-Cooled (HXC)*	2595	2606	2666	2812	2920	2942	3043	3057
Condenserless (HXA)	2140	2152	2194	2337	2342	2362	2408	2420
COMPRESSORS	Semi-Hermetic, Twin Screw							
Quantity	2	2	2	2	2	2	2	2
Nominal Capacity per Compressor (kW)	137/137	162/137	197/137	232/137	232/137	232/197	281/197	281/232
Economizer	No	No	No	No	No	No	No	No
No. Capacity Steps								
30HXC Unit	6	6	6	6	6	6	6	6
30HXA Unit (maximum on 30HXC unit with factory-installed option)	8	8	8	8	8	8	8	8
Minimum Step Capacity (%)								
30HXC Unit	20	20	20	20	20	20	20	20
30HXA Unit (30HXC unit with factory-installed option)	10	10	10	10	10	10	10	10
REFRIGERANT (HXC)	R-134a							
Charge† (kg) Circuit A/Circuit B**	38.6/38.6	39.1/38.6	47.3/36.4	54.5/36.4	55.5/45.0	55.5/45.0	60.9/45.0	58.6/50.0
EVAPORATOR	Shell and Tube with Enhanced Copper Tubes							
Part No. 10HX400-	401	401	402	408	406	406	405	405
Net Fluid Volume (L)	64.3	64.3	71.9	85.5	81.0	81.0	90.8	90.8
Maximum Refrigerant Pressure (kPa)	1517	1517	1517	1517	1517	1517	1517	1517
Maximum Water-Side Pressure (kPa)	2068	2068	2068	2068	2068	2068	2068	2068
Water Connections (in.)								
Inlet and Outlet (Std Pass)	4	4	4	5	5	5	5	5
Drain (NPT) (Std Pass)	3/8	3/8	3/8	3/8	3/8	3/8	3/8	3/8
Relief Valve								
Connection (in. NPTF)	3/4	3/4	3/4	3/4	3/4	3/4	3/4	3/4
Flow Capacity (kg air/min)	14.38	14.38	14.38	14.38	14.38	14.38	14.38	14.38
Relief Setting (kPa)	1517	1517	1517	1517	1517	1517	1517	1517
Standard Number of Passes	3	3	3	3	2	2	2	2
OIL SEPARATOR (HXA)								
Part No. 09RX400-	217	217	216	216	215	215	215	215
Maximum Refrigerant Pressure (kPa)	2205	2205	2205	2205	2205	2205	2205	2205
Refrigerant Connections (in.)								
Discharge Circuit A/Circuit B	2 1/8 / 2 1/8	2 1/8 / 2 1/8	2 1/8 / 2 1/8	2 1/8 / 2 1/8	2 1/8 / 2 1/8	2 1/8 / 2 1/8	2 1/8 / 2 1/8	2 1/8 / 2 1/8
Liquid Circuit A/Circuit B	1 1/8 / 2 1/8	1 1/8 / 1 1/8	1 1/8 / 1 1/8	1 1/8 / 1 1/8	1 1/8 / 1 1/8	1 1/8 / 1 1/8	1 1/8 / 1 1/8	1 1/8 / 1 1/8
Relief Valve								
Connection (in. SAE Flare)	5/8	5/8	5/8	5/8	5/8	5/8	5/8	5/8
Flow Capacity (kg air/min)	9.80	9.80	9.80	9.80	9.80	9.80	9.80	9.80
Relief Setting (kPa)	2206	2206	2206	2206	2206	2206	2206	2206
CONDENSER (HXC)	Shell and Tube with Enhanced Copper Tubes							
Part No. 09RX400-	257	257	258	258	259	259	260	260
Net Fluid Volume (L)	63.6	63.6	69.3	69.3	90.5	90.5	104.1	104.1
Maximum Refrigerant Pressure (kPa)	1517	1517	1517	1517	1517	1517	1517	1517
Maximum Water-Side Pressure (kPa)	2068	2068	2068	2068	2068	2068	2068	2068
Water Connections (in.)	Victaulic Type Connection							
Inlet and Outlet (Std Pass)	5	5	5	5	5	5	5	5
Drain (NPT) (Std Pass)	3/8	3/8	3/8	3/8	3/8	3/8	3/8	3/8
Relief Valve								
Connection (in. NPTF)	3/4	3/4	3/4	3/4	3/4	3/4	3/4	3/4
Flow Capacity (kg air/min)	14.38	14.38	14.38	14.38	14.38	14.38	14.38	14.38
Relief Setting (kPa)	1517	1517	1517	1517	1517	1517	1517	1517
Standard Number of Passes	2	2	2	2	2	2	2	2
DISCHARGE LINE††								
Relief Valve								
Connection (in. SAE Flare)	3/8	3/8	3/8	3/8	3/8	3/8	3/8	3/8
Flow Capacity (kg air/min)	2.9	2.9	2.9	2.9	2.9	2.9	2.9	2.9
Relief Pressure (kPa)	2413	2413	2413	2413	2413	2413	2413	2413

LEGEND

NPTF — National Pipe Thread Female
SAE — Society of Automotive Engineers

* The 30HX water-cooled chiller products for Canada are limited in use to water systems to having a maximum pressure rating of 250 psig (1,724 kPa) and a temperature rating of 150°F (65.6°C).

† Charges listed are for 30HXC units. The 30HXA units are shipped with a holding charge only. To determine the refrigerant charge requirements for 30HXA units, see the 30HXA Estimated System Refrigerant Charge table in the Refrigerant Charge section on page 29.

** For 30HXC,HXA units utilizing brine, the unit may require more refrigerant than what is supplied. Additional refrigerant must be field supplied.

†† Only on units with factory-installed suction service valves.

Physical data (cont)

SI (cont)

UNIT SIZE 30HX	161	171	186	206	246	261	271
UNIT OPERATING WEIGHT (kg)							
Water-Cooled (HXC)*	3441	3612	3612	4853	5056	5066	5083
Condenserless (HXA)	2610	2621	2698	3395	3457	3457	3457
COMPRESSORS	Semi-Hermetic, Twin Screw						
Quantity	2	2	2	3	3	3	3
Nominal Capacity per Compressor (kW)	281/197	232/281	281/281	232/137/281	281/197/281	281/232/281	281/281/281
Economizer	Yes	Yes	Yes	Yes	Yes	Yes	Yes
No. Capacity Steps							
30HXC Unit	6	6	6	8	8	8	8
30HXA Unit (maximum on 30HXC unit with factory-installed option)	8	8	8	11	11	11	11
Minimum Step Capacity (%)							
30HXC Unit	20	20	20	13	13	13	13
30HXA Unit (30HXC unit with factory-installed option)	10	10	10	7	7	7	7
REFRIGERANT (HXC)				R-134a			
Charge† (kg) Circuit A/Circuit B**	78.2/56.8	60.9/70.5	68.2/68.2	97.7/68.2	107/68.2	107/68.2	107/68.2
EVAPORATOR	Shell and Tube with Enhanced Copper Tubes						
Part No. 10HX400-	601	621	621	631	634	634	634
Net Fluid Volume (L)	107.9	126.4	126.4	163.2	178.7	178.8	178.7
Maximum Refrigerant Pressure (kPa)	1517	1517	1517	1517	1517	1517	1517
Maximum Water-Side Pressure (kPa)	2068	2068	2068	2068	2068	2068	2068
Water Connections (in.)							
Inlet and Outlet (Std Pass)	5	5	5	6	6	6	6
Drain (NPT) (Std Pass)	$^3/_8$	$^3/_8$	$^3/_8$	$^3/_8$	$^3/_8$	$^3/_8$	$^3/_8$
Relief Valve							
Connection (in. NPTF)	$^3/_4$	$^3/_4$	$^3/_4$	$^3/_4$	$^3/_4$	$^3/_4$	$^3/_4$
Flow Capacity (kg air/min)	14.28	14.38	14.38	14.38	14.38	14.38	14.38
Relief Setting (kPa)	1517	1517	1517	1517	1517	1517	1517
Standard Number of Passes	2	2	2	2	2	2	2
OIL SEPARATOR (HXA)							
Part No. 09RX400-	215	214	214	213	213	213	213
Maximum Refrigerant Pressure (kPa)	2205	2205	2205	2205	2205	2205	2205
Refrigerant Connections (in.)							
Discharge Circuit A/Circuit B	$2^1/_8$ / $2^1/_8$	$2^1/_8$ / $2^1/_8$	$2^1/_8$ / $2^1/_8$	(2) $2^1/_8$ / $2^1/_8$	(2) $2^1/_8$ / $2^1/_8$	(2) $2^1/_8$ / $2^1/_8$	(2) $2^1/_8$ / $2^1/_8$
Liquid Circuit A/Circuit B	$1^3/_8$ / $1^3/_8$	$1^3/_8$ / $1^3/_8$	$1^3/_8$ / $1^3/_8$	$1^5/_8$ / $1^3/_8$	$1^5/_8$ / $1^3/_8$	$1^5/_8$ / $1^3/_8$	$1^5/_8$ / $1^3/_8$
Relief Valve							
Connection (in. SAE Flare)	$^5/_8$	$^5/_8$	$^5/_8$	$^5/_8$	$^5/_8$	$^5/_8$	$^5/_8$
Flow Capacity (kg air/min)	9.80	9.80	9.80	9.80	9.80	9.80	9.80
Relief Setting (kPa)	2206	2206	2206	2206	2206	2206	2206
CONDENSER (HXC)	Shell and Tube with Enhanced Copper Tubes						
Part No. 09RX405-	261	262	262	263	264	264	264
Net Fluid Volume (L)	124.9	146.9	146.9	184.7	218.8	218.8	218.8
Maximum Refrigerant Pressure (kPa)	1517	1517	1517	1517	1517	1517	1517
Maximum Water-Side Pressure (kPa)	2068	2068	2068	2068	2068	2068	2068
Water Connections (in.)	Victaulic Type Connection						
Inlet and Outlet (Std Pass)	6	6	6	8	8	8	8
Drain (NPT) (Std Pass)	$^3/_8$	$^3/_8$	$^3/_8$	$^3/_8$	$^3/_8$	$^3/_8$	$^3/_8$
Relief Valve							
Connection (in. NPTF)	$^3/_4$	$^3/_4$	$^3/_4$	$^3/_4$	$^3/_4$	$^3/_4$	$^3/_4$
Flow Capacity (kg air/min)	14.38	14.38	14.38	14.38	14.38	14.38	14.38
Relief Setting (kPa)	1517	1517	1517	1517	1517	1517	1517
Standard Number of Passes	2	2	2	2	2	2	2
DISCHARGE LINE††							
Relief Valve							
Connection (in. SAE Flare)	$^3/_8$	$^3/_8$	$^3/_8$	$^3/_8$	$^3/_8$	$^3/_8$	$^3/_8$
Flow Capacity (kg air/min)	2.9	2.9	2.9	2.9	2.9	2.9	2.9
Relief Pressure (kPa)	2413	2413	2413	2413	2413	2413	2413

LEGEND

NPTF — National Pipe Thread Female
SAE — Society of Automotive Engineers

* The 30HX water-cooled chiller products for Canada are limited in use to water systems to having a maximum pressure rating of 250 psig (1,724 kPa) and a temperature rating of 150°F (65.6°C).

† Charges listed are for 30HXC units. The 30HXA units are shipped with a holding charge only. To determine the refrigerant charge requirements for 30HXA units, see the 30HXA Estimated System Refrigerant Charge table in the Refrigerant Charge section on page 29.

** For 30HXC,HXA units utilizing brine, the unit may require more refrigerant than what is supplied. Additional refrigerant must be field supplied.

†† Only on units with factory-installed suction service valves.

Options and accessories

ITEM	FACTORY-INSTALLED OPTION	FIELD-INSTALLED ACCESSORY
Wye-Delta Start	X	
Brine	X	
Minus-One-Pass Evaporator Head	X	
Plus-One-Pass Evaporator Head	X	
Control Power Transformer		X
Minimum Load Control	X	X
Sound Reduction Enclosure		X
Vibration Isolation		X
Temperature Reset Sensor		X
Chillervisor System Manager III		X
Evaporator Head Insulation		X
Suction Service Valves	X	
Energy Management Module	X	X
Nitrogen Holding Charge (30HXC)	X	
BACnet Communication	X	

Factory-installed options

Wye-delta start

Generally, Wye-delta start is not required when using multiple compressors since the starting current is generally less than with one larger compressor using Wye-delta start. Wye-delta start is standard on 208/230 v, 60 Hz, 230 v, 60 Hz, and 230 v, 50 Hz units. It is available as a factory-installed option for all other unit voltages.

Brine

The brine option permits supply liquid temperatures to be set below 40°F (4.4°C). Refrigeration circuit components, such as the expansion device, are modified at the factory to correct for the lower refrigeration flow rates. Special installation requirements apply to brine units. See Evaporator and Water-Cooled Condenser Freeze Protection section, page 24.

Minus-one-pass evaporator

This factory-installed option reduces pressure drop for high-flow applications and/or provides same end inlet and outlet for 076-106 sizes or opposite end inlet and outlet on 116-271 sizes.

Plus-one-pass evaporator

This factory-installed option improves low temperature brine performance. See the 30HX electronic catalog for performance data.

Minimum load control

This option allows additional capacity reduction for unit operation below the minimum step of unloading (down to 10% of full load capacity). Minimum load control is also available as a field-installed accessory.

Suction service valves

Standard refrigerant discharge isolation and liquid valves enable service personnel to store the refrigerant charge in the evaporator or condenser during servicing. This factory-installed option allows further isolation of the compressor from the evaporator vessel.

Energy management module (EMM)

The EMM is used for 4 to 20 mA leaving fluid temperature reset, cooling point reset, 4 to 20 mA demand limit and 2-step demand limit. Temperature reset lets the unit reset the leaving fluid temperature to a higher temperature during low load conditions. Temperature reset can also be accomplished based on return fluid, outdoor air, or space temperature. (The EMM option is not required when using entering-water, outdoor-air, or space temperature for temperature reset. These types of reset are available with the main board. However, an accessory thermistor is required for outdoor air and/or space temperature reset.) Demand limiting allows the unit capacity to be limited during periods of peak energy usage. Demand limit requires an external 4 to 20 mA signal or a 2-step remote pair of dry contacts. Both the 4 to 20 mA and 2-step demand limit percentage values are adjustable. EMM is also available as a field-installed accessory.

Nitrogen holding charge

The 30HXC units can be shipped with either the standard HFC-134a refrigerant charge or an optional nitrogen charge. The 30HXA units are always shipped with a nitrogen holding charge.

BACnet communication option

This option provides factory-installed communication capability with a BACnet MS/TP network. Allows integration with i-Vu® Open control system or a BACnet building automation system.

Field-installed accessories

Control power transformer

The transformer is sized to supply the needs of the control circuit, sourcing power from the main unit power connection.

Minimum load control

This accessory allows additional capacity reduction for unit operation below the minimum step of unloading (down to 10% of full load capacity). Minimum load control is also available as a factory-installed option.

Sound reduction enclosure

This kit contains a sound enclosure that covers the entire unit to reduce sound levels.

Vibration isolation

Neoprene isolators are field installed to reduce vibration transmission from the compressor through the floor and into the conditioned space.

Temperature reset sensor

This accessory sensor provides temperature reset capability from either the occupied space or outdoor-air temperature.

NOTE: Temperature reset capability using return temperature is standard.

Chillervisor System Manager III

This control can be used to regulate up to eight 30HXA or 30HXC chillers.

Evaporator head insulation

This accessory is designed with flexible, $^3/_4$ in. (19 mm) PVC foam (closed-cell) to insulate the evaporator heads to minimize heat loss and head sweating.

Energy management module (EMM)

The EMM is used for 4 to 20 mA leaving fluid temperature reset, cooling point reset, 4 to 20 mA demand limit and 2-step demand limit. Temperature reset lets the unit reset the leaving fluid temperature to a higher temperature during low load conditions. Temperature reset can also be accomplished based on return fluid, outdoor air, or space temperature. (The EMM option is not required when using entering-water, outdoor-air, or space temperature for temperature reset. These types of reset are available with the main board. However, an accessory thermistor is required for outdoor air and/or space temperature reset.) Demand limiting allows the unit capacity to be limited during periods of peak energy usage. Demand limit requires an external 4 to 20 mA signal or a 2-step remote pair of dry contacts. Both the 4 to 20 mA and 2-step demand limit percentage values are adjustable. EMM is also available as a factory-installed option.

Consult factory for other available options not listed here.

30HXC076-106

UNIT	OPERATING WEIGHT - LB (KG)	B	C	E	L	WGT DISTRIBUTION AT EACH MTG PLATE - LB (KG)					
						1	2	3	4	5	6
30HXC076	5720 (2595)	45.87 (1165)	45.87 (1165)	32.50 (826)	65.22 (1657)	741 (336)	946 (430)	597 (271)	1114 (505)	1423 (645)	899 (407)
30HXC086	5743 (2606)	45.87 (1165)	45.87 (1165)	32.50 (826)	65.22 (1657)	741 (336)	950 (432)	599 (272)	1116 (506)	1432 (649)	905 (410)
30HXC096	5875 (2666)	54.12 (1375)	37.63 (956)	32.50 (826)	65.22 (1657)	688 (312)	971 (440)	695 (315)	1031 (468)	1452 (658)	1038 (471)
30HXC106	6197 (2812)	54.12 (1375)	37.63 (956)	33.50 (851)	67.22 (1707)	732 (332)	1031 (468)	746 (338)	1076 (489)	1515 (687)	1096 (497)

NOTES:
1. Operating weight includes weight of water and refrigerant.
2. ⊕ Denotes center of gravity.
3. Dimensions are in inches (mm).
4. Recommended service clearance around machine is 36 in. (914.4 mm).
5. Victaulic nozzles are standard on all models. Flow switch factory installed in evaporator inlet Victaulic nozzle.

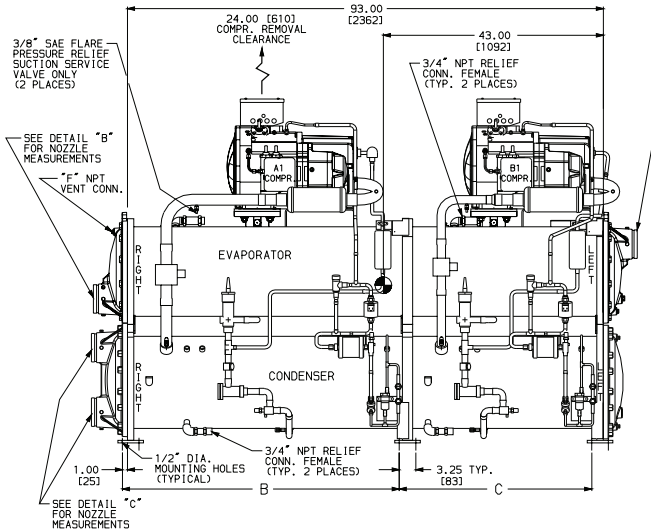

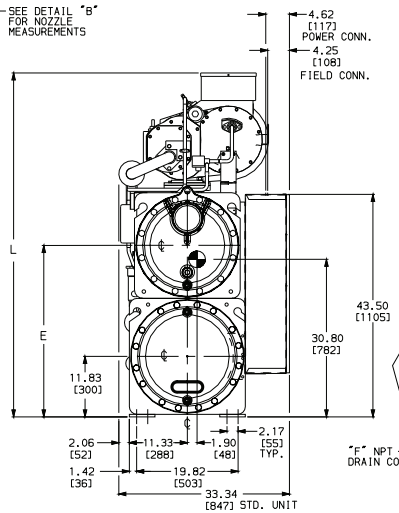

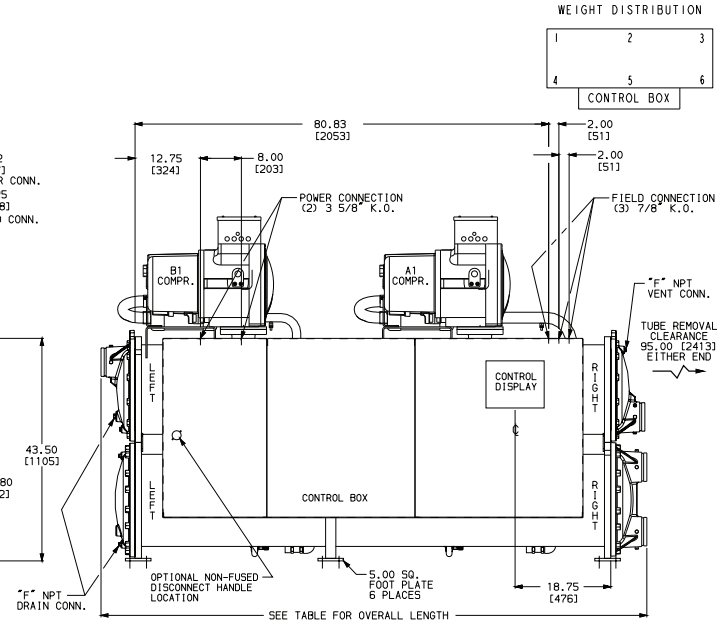

EVAPORATOR

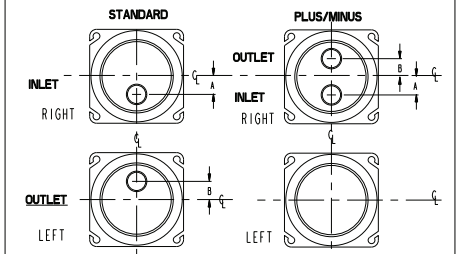

UNIT		A	B	F	NUMBER OF PASSES	CONNECTION SIZES
30HXC076,086,096	STD	4.65 [118]	4.65 [118]	3/8"	3	4"
30HXC076,086,096	MINUS	4.13 [105]	4.13 [105]	3/8"	2	5"
30HXC076,086,096	PLUS	4.68 [119]	4.68 [119]	1/2"	4	4"
30HXC106	STD	5.35 [136]	5.35 [136]	3/8"	3	5"
30HXC106	MINUS	5.35 [136]	5.35 [136]	3/8"	2	5"
30HXC106	PLUS	5.14 [131]	5.14 [131]	1/2"	4	5"

DETAIL "B"

CONDENSER

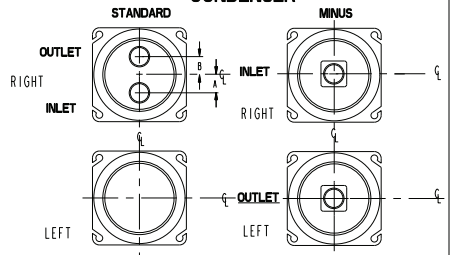

UNIT		A	B	NUMBER OF PASSES	CONNECTION SIZES
30HXC076,086,096	STD	6.30 [160]	6.30 [160]	2	5"
30HXC076,086,096	MINUS	-	-	1	6"
30HXC106	STD	6.30 [160]	6.30 [160]	2	5"
30HXC106	MINUS	-	-	1	6"

DETAIL "C"

OVERALL LENGTH TABLE

EVAPORATOR	CONDENSER	OVERALL LENGTH 076, 086, 096	OVERALL LENGTH 106
STANDARD EVAPORATOR	STANDARD CONDENSER	106.39 [2702]	106.70 [2710]
STANDARD EVAPORATOR	MINUS ONE PASS CONDENSER	113.00 [2870]	113.00 [2870]
PLUS ONE PASS EVAPORATOR	STANDARD CONDENSER	104.05 [2643]	104.05 [2643]
PLUS ONE PASS EVAPORATOR	MINUS ONE PASS CONDENSER	113.00 [2870]	113.00 [2870]
MINUS ONE PASS EVAPORATOR	STANDARD CONDENSER	103.99 [2641]	103.80 [2637]
MINUS ONE PASS EVAPORATOR	MINUS ONE PASS CONDENSER	113.00 [2870]	113.00 [2870]

DOOR SWING CLEARANCE

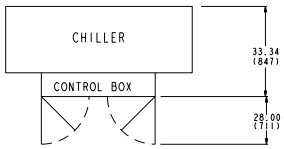

30HXC116-146

UNIT	OPERATING WEIGHT - LB (KG)	WGT DISTRIBUTION AT EACH MTG PLATE - LB (KG)					
		1	2	3	4	5	6
30HXC116	6435 (2920)	730 (331)	1117 (507)	779 (353)	1056 (479)	1620 (735)	1131 (513)
30HXC126	6485 (2942)	740 (336)	1130 (513)	782 (355)	1064 (482)	1633 (740)	1134 (515)
30HXC136	6708 (3040)	760 (345)	1180 (535)	813 (369)	1086 (492)	1694 (768)	1175 (533)
30HXC146	6738 (3057)	765 (347)	1186 (538)	817 (371)	1088 (493)	1702 (772)	1175 (534)

NOTES:
1. Operating weight includes weight of water and refrigerant.
2. ⊕ Denotes center of gravity.
3. Dimensions are in inches (mm).
4. Recommended service clearance around machine is 36 in. (914.4 mm).
5. Victaulic nozzles are standard on all models. Flow switch factory installed in evaporator inlet Victaulic nozzle.

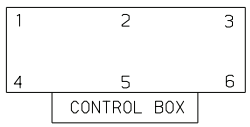

WEIGHT DISTRIBUTION

DOOR SWING CLEARANCE

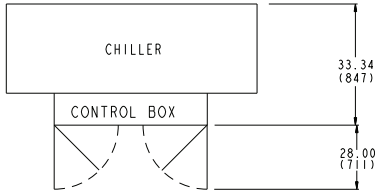

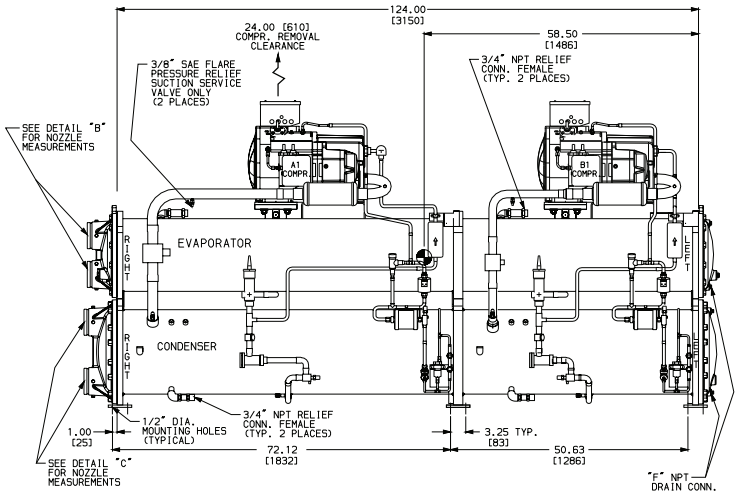

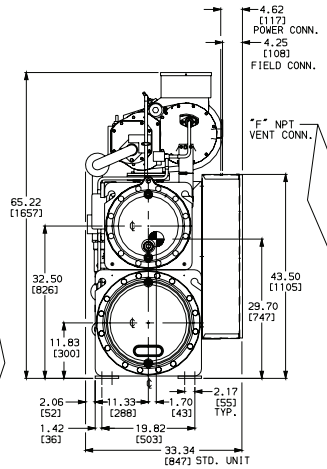

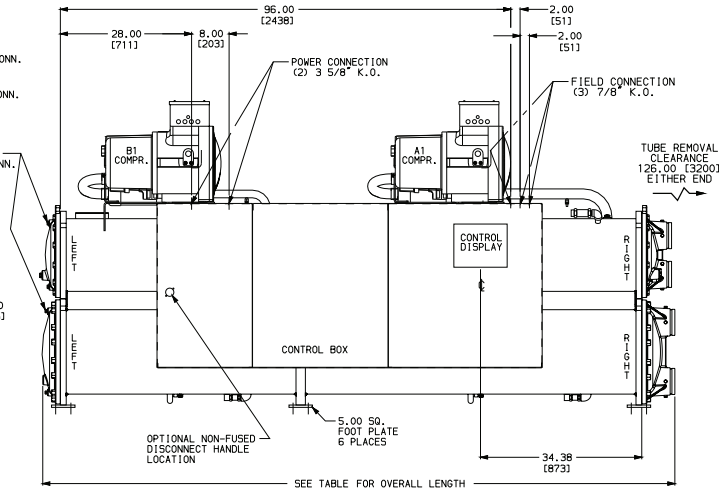

EVAPORATOR

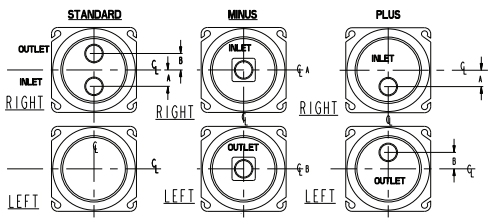

UNIT		A	B	F	NUMBER OF PASSES	CONNECTION SIZE
30HXC116,126,136,146	STD	4.13 [105]	4.13 [105]	3/8"	2	5"
30HXC116,126,136,146	MINUS	0.00	0.00	1/2"	1	5"
30HXC116,126,136,146	PLUS	4.65 [118]	4.65 [118]	3/8"	3	4"

DETAIL "B"

CONDENSER

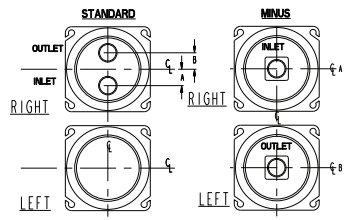

UNIT		A	B	NUMBER OF PASSES	CONNECTION SIZE
30HXC116,126,136,146	STD	6.30 [160]	6.30 [160]	2	5"
30HXC116,126,136,146	MINUS	0.00	0.00	1	6"

DETAIL "C"

OVERALL LENGTH TABLE		
EVAPORATOR	CONDENSER	OVERALL LENGTH
STANDARD EVAPORATOR	STANDARD CONDENSER	134.99 [3429]
STANDARD EVAPORATOR	MINUS ONE PASS CONDENSER	137.39 [3490]
PLUS ONE PASS EVAPORATOR	STANDARD CONDENSER	144.00 [3658]
PLUS ONE PASS EVAPORATOR	MINUS ONE PASS CONDENSER	144.00 [3658]
MINUS ONE PASS EVAPORATOR	STANDARD CONDENSER	141.05 [3583]
MINUS ONE PASS EVAPORATOR	MINUS ONE PASS CONDENSER	144.00 [3658]

30HXC161-186

UNIT	OPERATING WEIGHT - LB (KG)	B	C	WGT DISTRIBUTION AT EACH MTG PLATE - LB (KG)					
				1	2	3	4	5	6
30HXC161	7583 (3441)	72.12 (1832)	50.63 (1286)	831 (378)	1294 (587)	924 (419)	1240 (563)	1923 (872)	1370 (621)
30HXC171	7959 (3612)	61.37 (1559)	61.37 (1559)	975 (442)	1379 (625)	872 (395)	1429 (649)	2023 (917)	1279 (582)
30HXC186	7959 (3612)	61.37 (1559)	61.37 (1559)	975 (442)	1379 (625)	872 (395)	1429 (649)	2023 (917)	1279 (582)

NOTES:
1. Operating weight includes weight of water and refrigerant.
2. ⊕ Denotes center of gravity.
3. Dimensions are in inches (mm).
4. Recommended service clearance around machine is 36 in. (914.4 mm).
5. Victaulic nozzles are standard on all models. Flow switch factory installed in evaporator inlet Victaulic nozzle.

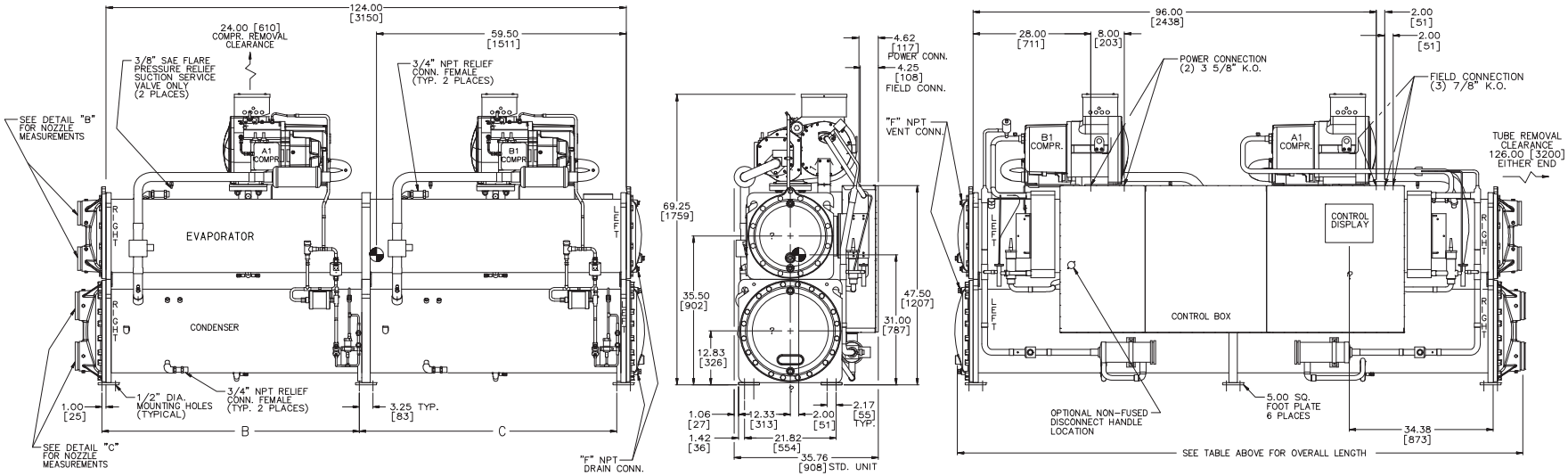

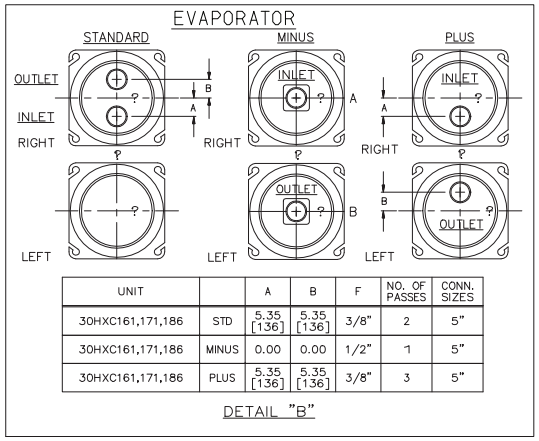

UNIT		A	B	F	NO. OF PASSES	CONN. SIZES
30HXC161,171,186	STD	5.35 [136]	5.35 [136]	3/8"	2	5"
30HXC161,171,186	MINUS	0.00	0.00	1/2"	1	5"
30HXC161,171,186	PLUS	5.35 [136]	5.35 [136]	3/8"	3	5"

DETAIL "B"

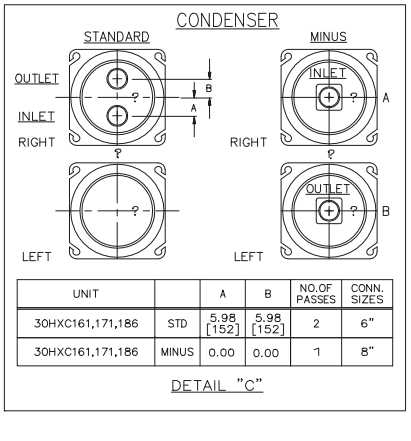

UNIT		A	B	NO.OF PASSES	CONN. SIZES
30HXC161,171,186	STD	5.98 [152]	5.98 [152]	2	6"
30HXC161,171,186	MINUS	0.00	0.00	1	8"

DETAIL "C"

OVERALL LENGTH TABLE

EVAPORATOR	CONDENSER	OVERALL LENGTH
STANDARD EVAPORATOR	STANDARD CONDENSER	135.722 [3447]
STANDARD EVAPORATOR	MINUS ONE PASS CONDENSER	144.00 [3658]
PLUS ONE PASS EVAPORATOR	STANDARD CONDENSER	138.01 [3506]
PLUS ONE PASS EVAPORATOR	MINUS ONE PASS CONDENSER	144.00 [3658]
MINUS ONE PASS EVAPORATOR	STANDARD CONDENSER	144.00 [3658]
MINUS ONE PASS EVAPORATOR	MINUS ONE PASS CONDENSER	144.00 [3658]

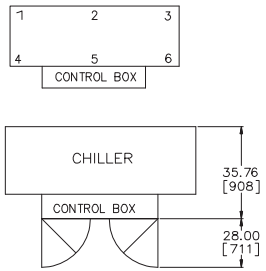

DOOR SWING CLEARANCE
SCALE: NONE

30HXC206-271

UNIT	OPERATING WEIGHT - lb (kg)	A	WT. DISTIBUTION AT EACH MOUNTING PLATE - lb (kg)					
			1	2	3	4	5	6
30HXC206	10700 (4853)	33.88 (860)	959 (435)	2433 (1103)	1257 (570)	1214 (551)	3168 (1437)	1669 (756)
30HXC246	11144 (5056)	34.38 (873)	1001 (454)	2555 (1159)	1327 (601)	1172 (531)	3328 (1510)	1761 (799)
30HXC261	11167 (5066)	34.38 (873)	1001 (454)	2560 (1161)	1332 (604)	1172 (531)	3335 (1513)	1767 (802)
30HXC271	11204 (5083)	34.38 (873)	1001 (454)	2569 (1165)	1339 (608)	1172 (531)	3346 (1518)	1777 (806)

NOTES:
1. Operating weight includes weight of water and refrigerant.
2. ⊕ Denotes center of gravity.
3. Dimensions are in inches (mm).
4. Recommended service clearance around machine is 36 in. (914.4 mm).
5. Victaulic nozzles are standard on all models. Flow switch factory installed in evaporator inlet Victaulic nozzle.

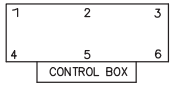

WEIGHT DISTRIBUTION

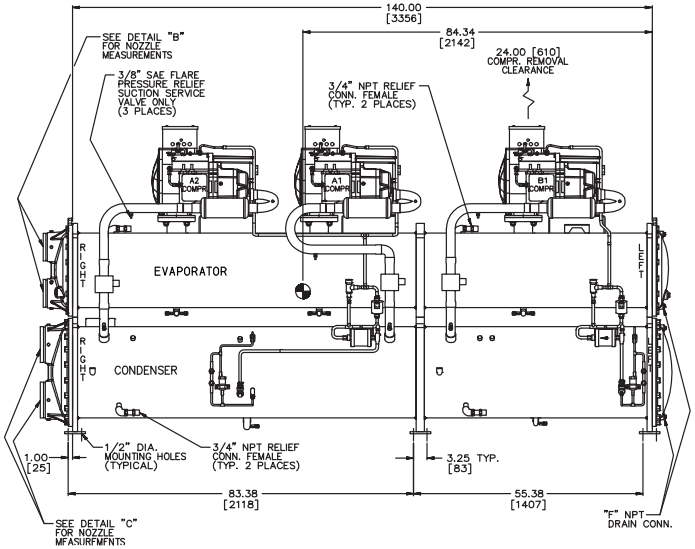

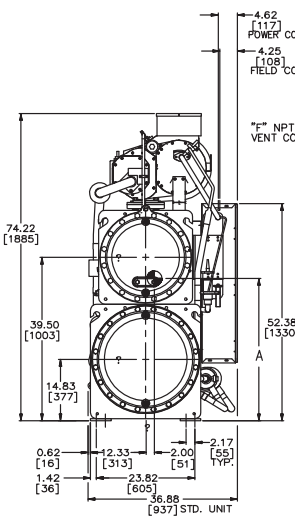

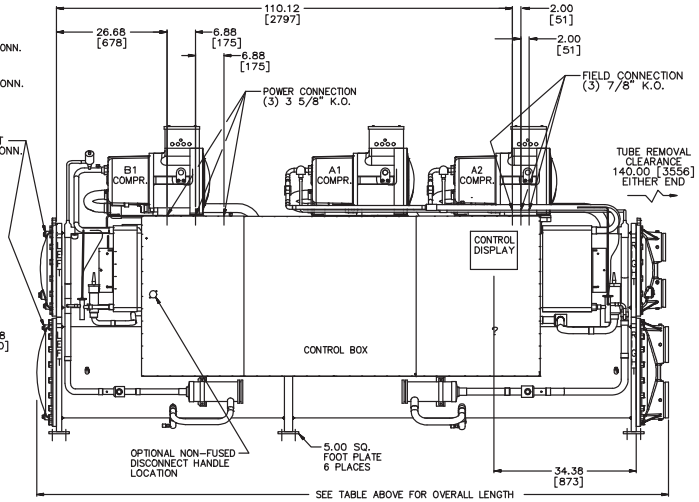

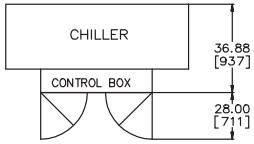

DOOR SWING CLEARANCE
SCALE: NONE

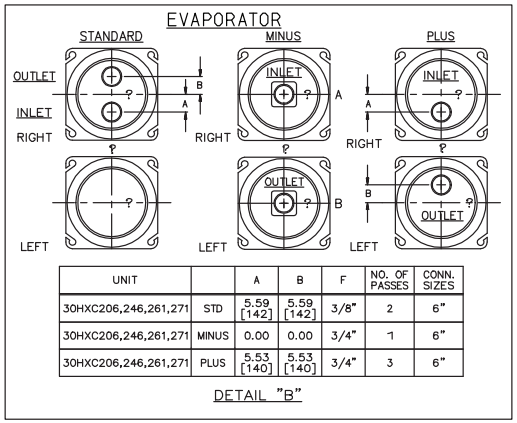

UNIT		A	B	F	NO. OF PASSES	CONN. SIZES
30HXC206,246,261,271	STD	5.59 [142]	5.59 [142]	3/8"	2	6"
30HXC206,246,261,271	MINUS	0.00	0.00	3/4"	1	6"
30HXC206,246,261,271	PLUS	5.53 [140]	5.53 [140]	3/4"	3	6"

DETAIL "B"

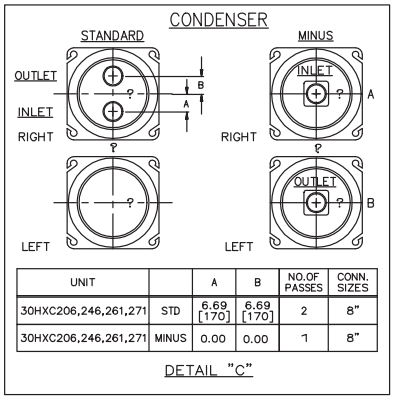

UNIT		A	B	NO.OF PASSES	CONN. SIZES
30HXC206,246,261,271	STD	6.69 [170]	6.69 [170]	2	8"
30HXC206,246,261,271	MINUS	0.00	0.00	1	8"

DETAIL "C"

OVERALL LENGTH TABLE

EVAPORATOR	CONDENSER	OVERALL LENGTH
STANDARD EVAPORATOR	STANDARD CONDENSER	152.54 [3875]
STANDARD EVAPORATOR	MINUS ONE PASS CONDENSER	160.00 [4064]
PLUS ONE PASS EVAPORATOR	STANDARD CONDENSER	160.00 [4064]
PLUS ONE PASS EVAPORATOR	MINUS ONE PASS CONDENSER	160.00 [4064]
MINUS ONE PASS EVAPORATOR	STANDARD CONDENSER	160.00 [4064]
MINUS ONE PASS EVAPORATOR	MINUS ONE PASS CONDENSER	160.00 [4064]

30HXA076-106

UNIT	OPERATING WEIGHT - lb (kg)	B	C	E	L	P	R	S	WGT DISTRIBUTION AT EACH MTG PLATE - lb (kg)					
									1	2	3	4	5	6
30HXA076	4717 (2140)	45.87 (1165)	45.87 (1165)	32.50 (826)	65.22 (1657)	3.88 (99)	41.25 (1048)	46.25 (1175)	555 (252)	793 (360)	418 (190)	926 (420)	1326 (601)	699 (317)
30HXA086	4744 (2152)	45.87 (1165)	45.87 (1165)	32.50 (826)	65.22 (1657)	3.88 (99)	41.25 (1048)	46.25 (1175)	555 (252)	798 (362)	418 (190)	928 (421)	1340 (608)	705 (320)
30HXA096	4835 (2194)	54.12 (1375)	37.63 (956)	32.50 (826)	65.22 (1657)	6.25 (159)	49.50 (1257)	38.00 (965)	509 (231)	808 (367)	493 (224)	848 (385)	1350 (612)	827 (375)
30HXA106	5151 (2337)	54.12 (1375)	37.63 (956)	33.50 (851)	67.22 (1707)	6.25 (159)	49.50 (1257)	38.00 (965)	555 (252)	869 (394)	541 (245)	896 (406)	1410 (640)	880 (399)

OVERALL LENGTH TABLE		
EVAPORATOR	OVERALL LENGTH 076, 086, 096	OVERALL LENGTH 106
STANDARD EVAPORATOR	105.68 [2684]	106.30 [2700]
MINUS ONE PASS EVAPORATOR	103.28 [2623]	103.40 [2626]
PLUS ONE PASS EVAPORATOR	107.00 [2718]	107.00 [2718]

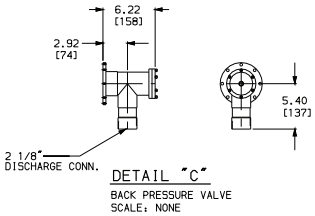

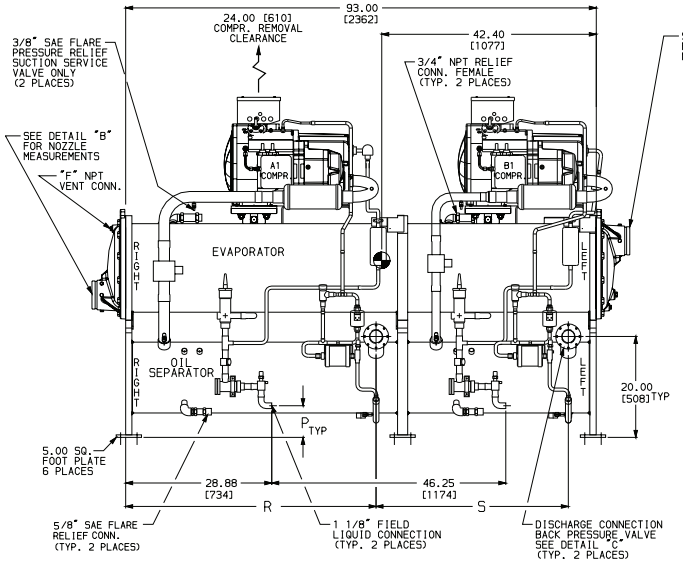

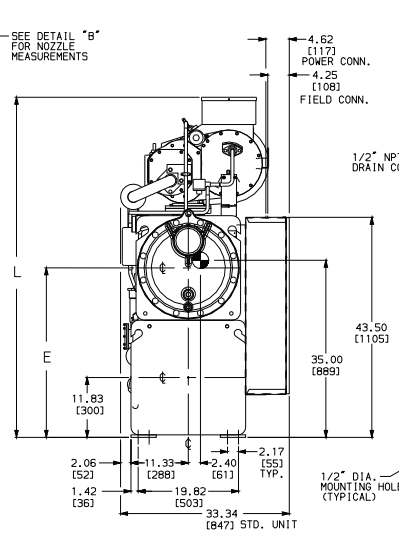

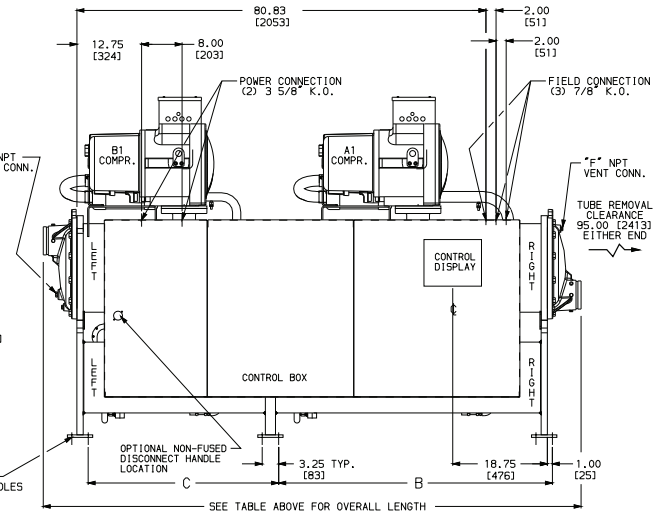

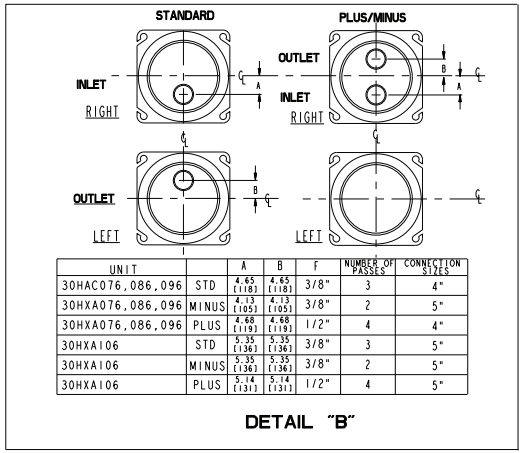

UNIT		A	B	F	NUMBER OF PASSES	CONNECTION SIZES
30HAC076,086,096	STD	4.65 [118]	4.65 [118]	3/8"	3	4"
30HXA076,086,096	MINUS	4.13 [105]	4.13 [105]	3/8"	2	5"
30HXA076,086,096	PLUS	4.68 [119]	4.68 [119]	1/2"	4	4"
30HXA106	STD	5.35 [136]	5.35 [136]	3/8"	3	5"
30HXA106	MINUS	5.35 [136]	5.35 [136]	3/8"	2	5"
30HXA106	PLUS	5.14 [131]	5.14 [131]	1/2"	4	5"

DETAIL "B"

NOTES:

1. Operating weight includes weight of water and refrigerant.
2. ⊕ Denotes center of gravity.
3. Dimensions are in inches (mm).
4. Recommended service clearance around machine is 36 in. (914.4 mm).
5. Victaulic nozzles are standard on all models. Flow switch factory installed in evaporator inlet Victaulic nozzle.

DOOR SWING CLEARANCE

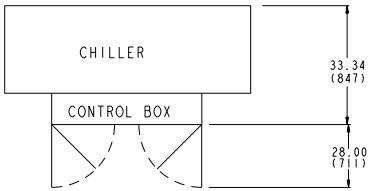

WEIGHT DISTRIBUTION

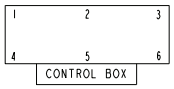

Dimensions (cont)

30HXA116-146

UNIT	OPERATING WEIGHT - lb (kg)	WGT DISTRIBUTION AT EACH MTG PLATE - lb (kg)					
		1	2	3	4	5	6
30HXA116	5163 (2342)	530 (240)	895 (406)	540 (245)	855 (388)	1456 (660)	887 (402)
30HXA126	5205 (2362)	540 (245)	905 (410)	541 (245)	864 (392)	1468 (666)	887 (402)
30HXA136	5309 (2408)	548 (249)	926 (420)	555 (252)	874 (396)	1498 (679)	908 (412)
30HXA146	5333 (2420)	551 (250)	930 (422)	555 (252)	883 (400)	1506 (683)	908 (412)

OVERALL LENGTH TABLE	
EVAPORATOR	OVERALL LENGTH
STANDARD EVAPORATOR	134.28 [3411]
MINUS ONE PASS EVAPORATOR	144.0 [3658]
PLUS ONE PASS EVAPORATOR	136.68 [3472]

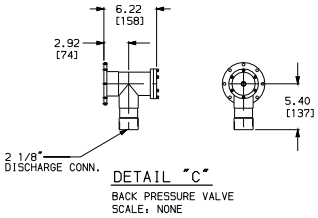

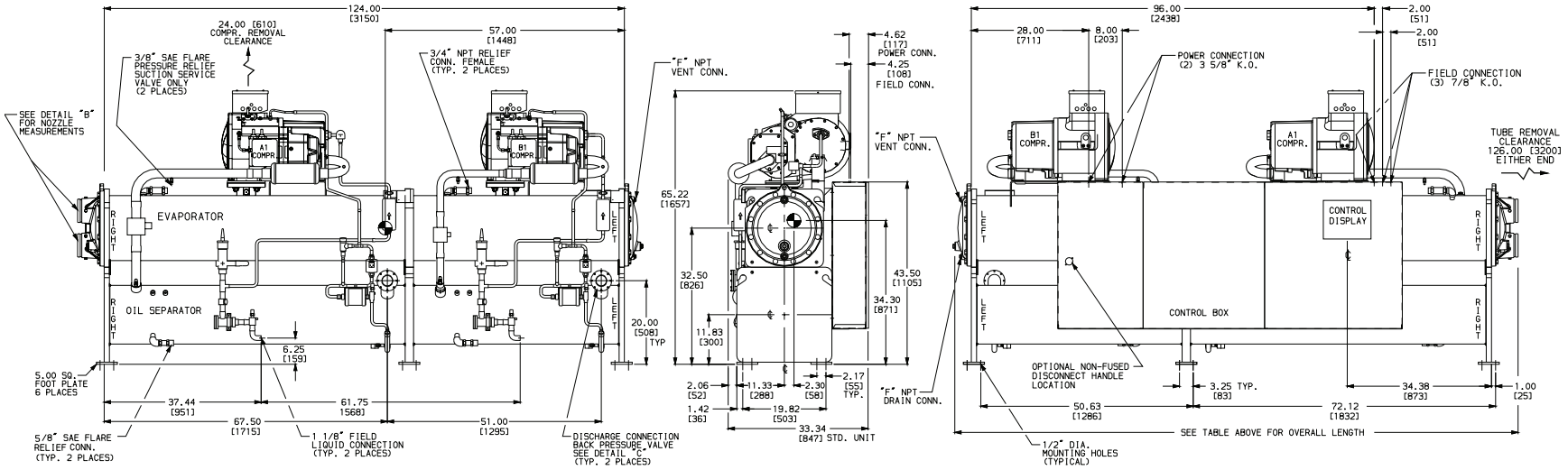

DOOR SWING CLEARANCE

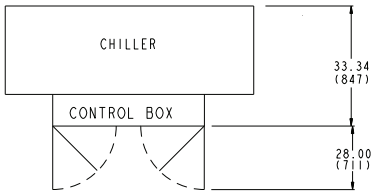

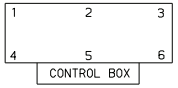

WEIGHT DISTRIBUTION

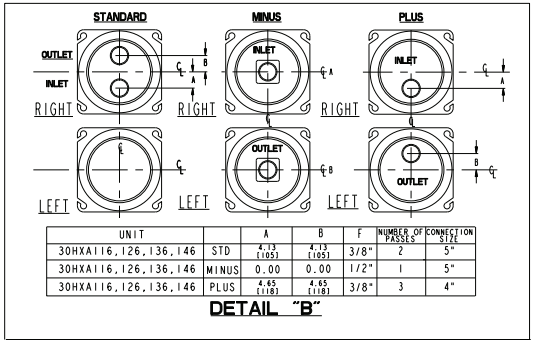

UNIT		A	B	F	NUMBER OF PASSES	CONNECTION SIZE
30HXA116,126,136,146	STD	4.13 [105]	4.13 [105]	3/8"	2	5"
30HXA116,126,136,146	MINUS	0.00	0.00	1/2"	1	5"
30HXA116,126,136,146	PLUS	4.65 [118]	4.65 [118]	3/8"	3	4"

NOTES:
1. Operating weight includes weight of water and refrigerant.
2. ⊕ Denotes center of gravity.
3. Dimensions are in inches (mm).
4. Recommended service clearance around machine is 36 in. (914.4 mm).
5. Victaulic nozzles are standard on all models. Flow switch factory installed in evaporator inlet Victaulic nozzle.

30HXA161-186

UNIT	OPERATING WEIGHT - lb (kg)	B	C	R	S	T	WGT DISTRIBUTION AT EACH MTG PLATE - lb (kg)					
							1	2	3	4	5	6
30HXA161	5752 (2610)	72.12 (1832)	50.63 (1286)	67.50 (1715)	51.00 (1295)	48.75 (1238)	560 (254)	965 (438)	598 (271)	954 (433)	1650 (748)	1025 (465)
30HXA171	5777 (2621)	61.37 (1559)	61.37 (1559)	56.75 (1441)	61.75 (1532)	44.31 (1125)	627 (284)	968 (439)	534 (242)	1072 (486)	1658 (752)	918 (416)
30HXA186	5946 (2698)	61.37 (1559)	61.37 (1559)	56.75 (1441)	61.75 (1532)	44.31 (1125)	648 (294)	1004 (455)	552 (250)	1110 (504)	1703 (772)	939 (426)

OVERALL LENGTH TABLE	
EVAPORATOR	OVERALL LENGTH
STANDARD EVAPORATOR	134.40 [3414]
MINUS ONE PASS EVAPORATOR	144.0 [3658]
PLUS ONE PASS EVAPORATOR	137.30 [3487]

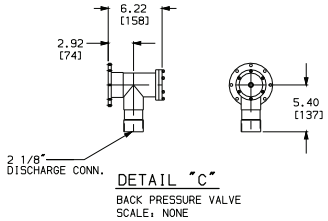

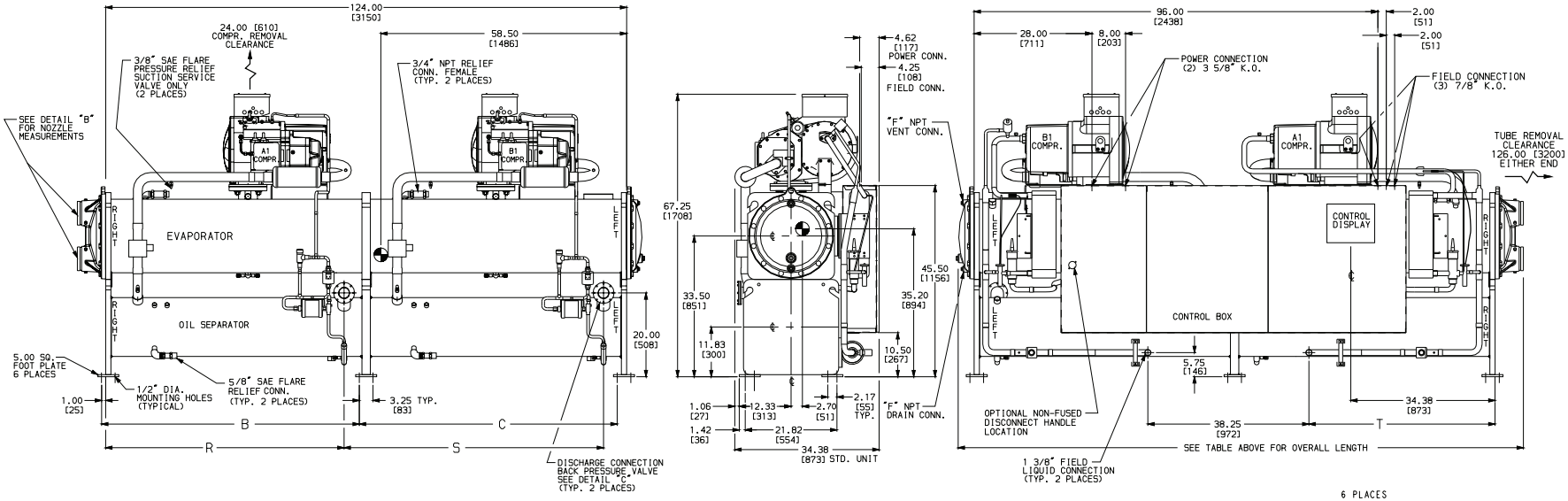

DOOR SWING CLEARANCE

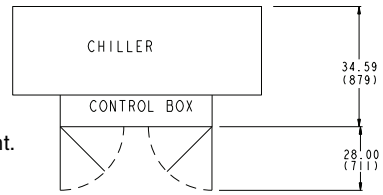

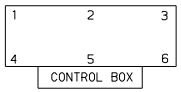

WEIGHT DISTRIBUTION

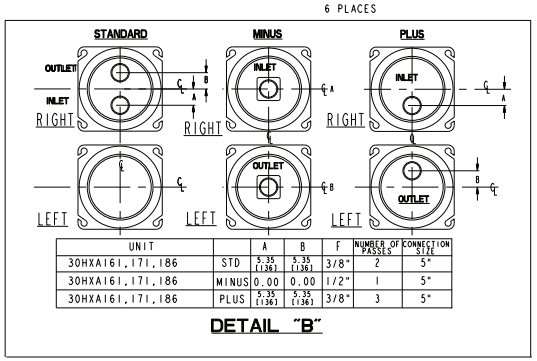

UNIT		A	B	F	NUMBER OF PASSES	CONNECTION SIZE
30HXA161,171,186	STD	5.35 [136]	5.35 [136]	3/8"	2	5"
30HXA161,171,186	MINUS	0.00	0.00	1/2"	1	5"
30HXA161,171,186	PLUS	5.35 [136]	5.35 [136]	3/8"	3	5"

DETAIL "B"

NOTES:
1. Operating weight includes weight of water and refrigerant.
2. ⊕ Denotes center of gravity.
3. Dimensions are in inches (mm).
4. Recommended service clearance around machine is 36 in. (914.4 mm).
5. Victaulic nozzles are standard on all models. Flow switch factory installed in evaporator inlet Victaulic nozzle.

30HXA206-271

UNIT	OPERATING WEIGHT - lb (kg)	WGT DISTRIBUTION AT EACH MTG PLATE - lb (kg)					
		1	2	3	4	5	6
30HXA206	7485 (3395)	671 (304)	1702 (772)	879 (399)	850 (385)	2216 (1005)	1167 (529)
30HXA246	7621 (3457)	681 (309)	1748 (793)	911 (413)	797 (362)	2276 (1032)	1209 (548)
30HXA261	7621 (3457)	681 (309)	1748 (793)	911 (413)	797 (362)	2276 (1032)	1209 (548)
30HXA271	7621 (3457)	681 (309)	1748 (793)	911 (413)	797 (362)	2276 (1032)	1209 (548)

OVERALL LENGTH TABLE	
EVAPORATOR	OVERALL LENGTH
STANDARD EVAPORATOR	150.95 [3834]
MINUS ONE PASS EVAPORATOR	160.00 [4064]
PLUS ONE PASS EVAPORATOR	160.00 [4064]

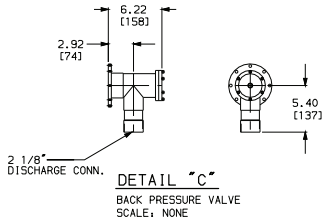

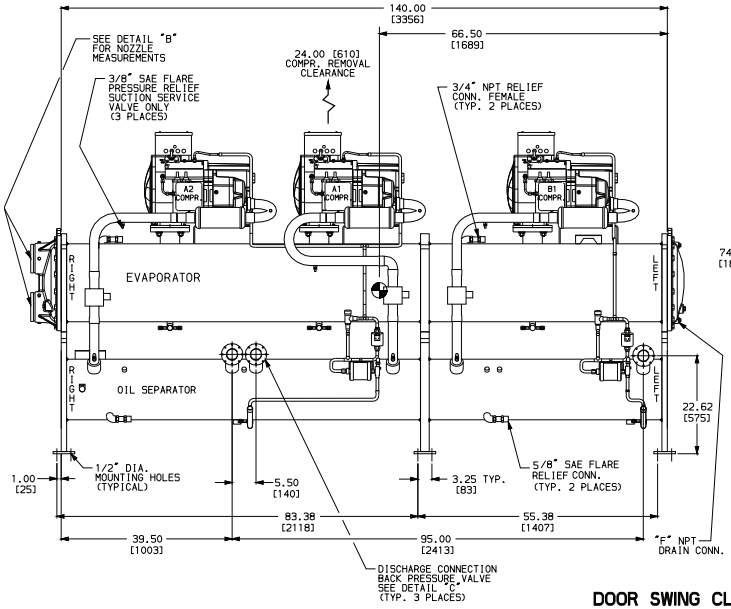

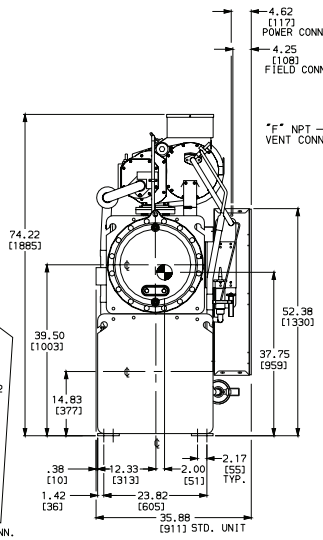

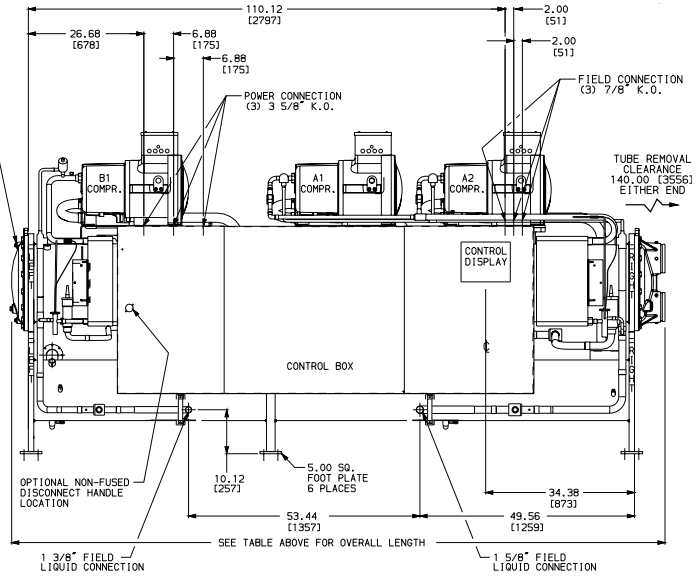

DOOR SWING CLEARANCE

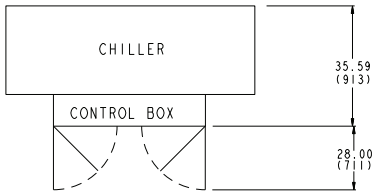

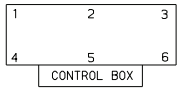

WEIGHT DISTRIBUTION

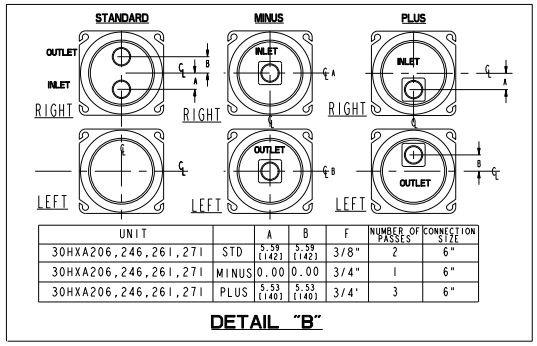

UNIT		A	B	F	NUMBER OF PASSES	CONNECTION SIZE
30HXA206,246,261,271	STD	5.59 [142]	5.59 [142]	3/8"	2	6"
30HXA206,246,261,271	MINUS	0.00	0.00	3/4"	1	6"
30HXA206,246,261,271	PLUS	5.53 [140]	5.53 [140]	3/4'	3	6"

NOTES:
1. Operating weight includes weight of water and refrigerant.
2. ⊕ Denotes center of gravity.
3. Dimensions are in inches (mm).
4. Recommended service clearance around machine is 36 in. (914.4 mm).
5. Victaulic nozzles are standard on all models. Flow switch factory installed in evaporator inlet Victaulic nozzle.

ACCESSORY SOUND ENCLOSURE

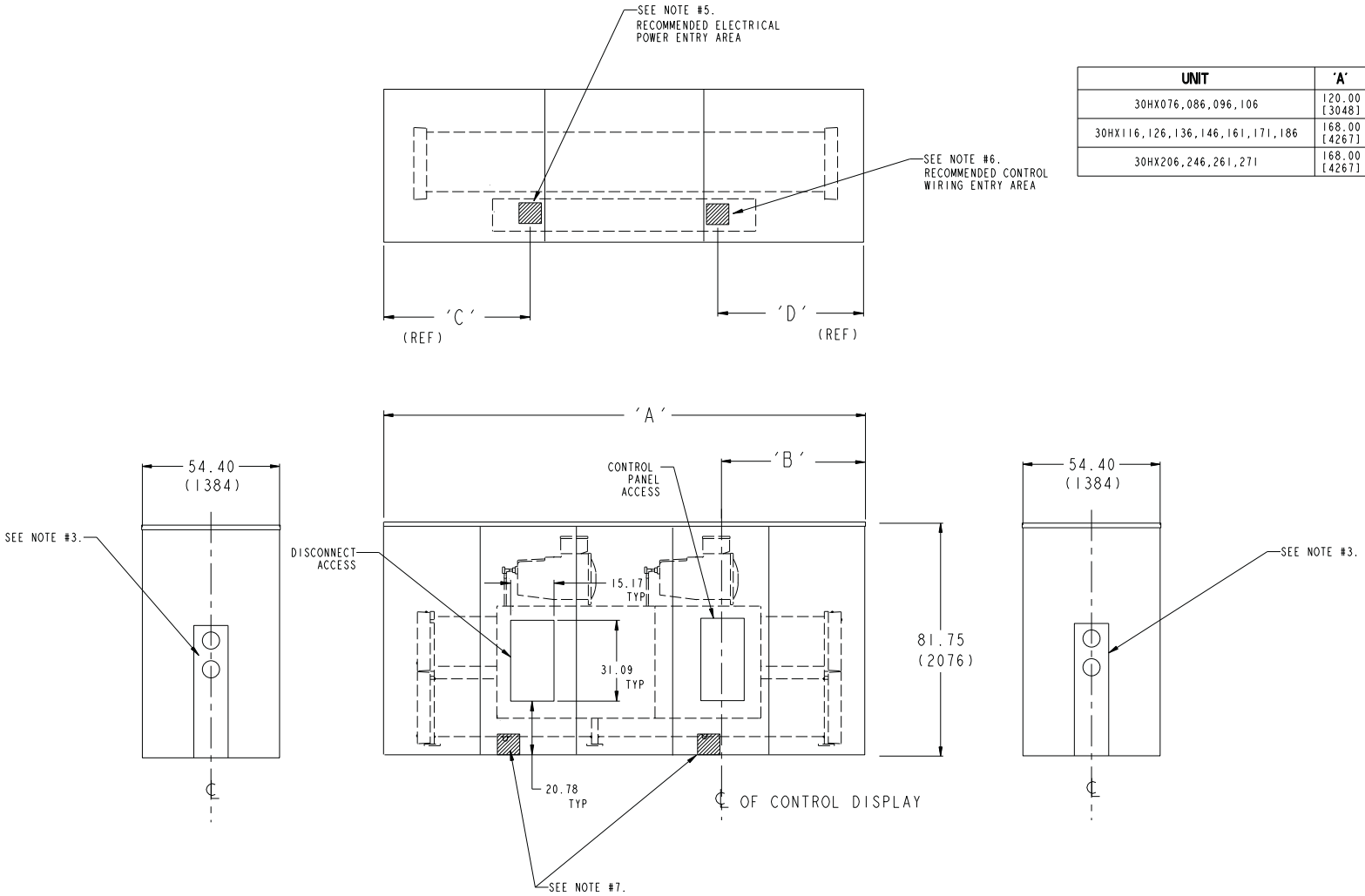

UNIT	'A'	'B'	'C'	'D'
30HX076,086,096,106	120.00 [3048]	36.00 [915]	21.16 [538]	17.84 [453]
30HX116,126,136,146,161,171,186	168.00 [4267]	60.00 [1525]	36.67 [931]	29.84 [758]
30HX206,246,261,271	168.00 [4267]	60.00 [1525]	37.32 [948]	32.68 [830]

NOTES:
1. Dimensions are in inches (millimeters).
2. Recommended service clearance around machine is 36 in. (914.4).
3. Unused portion of piping openings must be closed and insulated for acoustic purposes. Use filler panel in accessory package.
4. Field-fabricated holes must be closed and insulated for acoustic purposes.
5. Recommended electrical power supply area. Notch to suit and cover/insulate remaining open area for acoustic purposes.
6. Recommended control wiring entry area. Notch to suit and cover/insulate remaining open area for acoustic purposes.
7. Recommended evaporator relief valve vent line and 30HXC condenser relief vent line entry area. The 30HXA discharge and liquid line entry areas are on opposite side. Notch enclosure to suit particular installation.
8. Model in drawing is typical and represents 30HX116-146 sizes in the 30HX-900---001 accessory sound enclosure.
9. Sound enclosure accessory should be aligned to the center lines of the control panel access and piping openings.

WEIGHT DISTRIBUTION AT MOUNTING PLATES

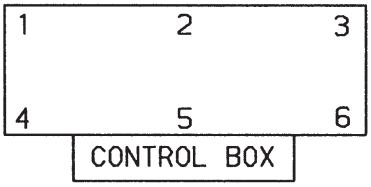

WEIGHT DISTRIBUTION AT EACH MOUNTING PLATE

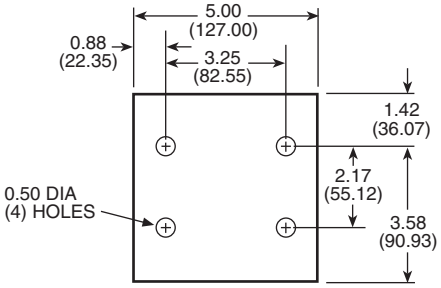

NOTE: Dimensions shown in inches (mm).

30HX FOOT

30HXA UNITS — lb (kg)

UNIT 30HXA	MOUNTING PLATE NO.					
	1	2	3	4	5	6
076	555 (252)	793 (360)	418 (190)	926 (420)	1326 (601)	699 (317)
086	555 (252)	798 (362)	418 (190)	928 (421)	1340 (608)	705 (320)
096	509 (231)	808 (367)	493 (224)	848 (385)	1350 (612)	827 (375)
106	555 (252)	869 (394)	541 (245)	896 (406)	1410 (640)	880 (399)
116	530 (240)	895 (406)	540 (245)	855 (388)	1456 (660)	887 (402)
126	540 (245)	905 (410)	541 (245)	864 (392)	1468 (666)	887 (402)
136	548 (249)	926 (420)	555 (252)	873 (396)	1498 (679)	908 (412)
146	551 (250)	930 (422)	555 (252)	883 (400)	1506 (683)	908 (412)
161	560 (254)	965 (438)	598 (271)	954 (433)	1650 (748)	1025 (465)
171	627 (284)	968 (439)	534 (242)	1072 (486)	1658 (752)	918 (416)
186	648 (294)	1004 (455)	552 (250)	1110 (504)	1703 (772)	939 (426)
206	671 (304)	1702 (772)	879 (399)	850 (385)	2216 (1005)	1167 (529)
246	681 (309)	1748 (793)	911 (413)	797 (362)	2276 (1032)	1209 (548)
261	681 (309)	1748 (793)	911 (413)	797 (362)	2276 (1032)	1209 (548)
271	681 (309)	1748 (793)	911 (413)	797 (362)	2276 (1032)	1209 (548)

30HXC UNITS — lb (kg)

UNIT 30HXC	MOUNTING PLATE NO.					
	1	2	3	4	5	6
076	738 (335)	943 (428)	595 (270)	1110 (503)	1418 (643)	896 (406)
086	738 (335)	947 (430)	597 (271)	1112 (504)	1427 (647)	902 (409)
096	686 (311)	968 (439)	693 (314)	1027 (466)	1447 (656)	1034 (469)
106	730 (331)	1028 (466)	744 (337)	1073 (487)	1510 (685)	1092 (495)
116	728 (330)	1114 (505)	777 (352)	1053 (478)	1615 (733)	1127 (511)
126	738 (335)	1127 (511)	780 (354)	1061 (481)	1628 (738)	1131 (513)
136	758 (344)	1176 (533)	811 (368)	1083 (491)	1689 (766)	1171 (531)
146	763 (346)	1182 (536)	815 (370)	1085 (492)	1697 (770)	1172 (532)
161	831 (378)	1294 (587)	924 (419)	1240 (563)	1923 (872)	1370 (621)
171	975 (442)	1379 (625)	872 (395)	1429 (649)	2023 (917)	1279 (582)
186	975 (442)	1379 (625)	872 (395)	1429 (649)	2023 (917)	1279 (582)
206	959 (435)	2433 (1103)	1257 (570)	1214 (551)	3168 (1437)	1669 (756)
246	1001 (454)	2555 (1159)	1327 (601)	1172 (531)	3328 (1510)	1761 (799)
261	1001 (454)	2560 (1161)	1332 (604)	1172 (531)	3335 (1513)	1767 (802)
271	1001 (454)	2569 (1165)	1339 (608)	1172 (531)	3346 (1518)	1777 (806)

NOTE: See pages 11-18 for center of gravity details.

Unit storage

Provide machine protection

Store machine and starter indoors, protected from construction dirt and moisture. Inspect under shipping tarps, bags, or crates to be sure water has not collected during transit. Keep protective shipping covers in place until machine is ready for installation.

Unit location

Unit should be level (particularly in its major lengthwise dimension) to assure proper oil return.

The unit should be located indoors in an area of temperature between 50 and 104°F (10 and 40°C).

Good acoustic design practice should be followed, i.e., unit should not be located adjacent to sound-sensitive areas unless appropriate consideration has been made.

Evaporator fluid temperature

1. *Maximum* leaving water (fluid) temperature (LWT) is 60°F (21°C). Unit can start and pull down with up to 95°F (35°C entering water (fluid) temperature due to MOP (maximum operating pressure) feature of the expansion valve. For sustained operation, it is recommended that entering fluid temperature not exceed 70°F (21.1°C).
2. *Minimum* LWT is 40°F (4.4°C) for standard units. The brine option is required for operation with leaving fluid temperatures in the range of 39 to 14°F (4 to –9°C). For ratings below 40°F (4.4°C) LWT, contact your local Carrier representative.
3. *Minimum* entering water (fluid) temperature (EWT) is 45°F (7.2°C). *Maximum* EWT is 70°F (21.1°C).

Leaving-fluid temperature reset

The accessory reset sensor can be applied to the chiller to provide reset of in LWT constant fluid flow systems. Reset reduces compressor power usage at part load when design LWT is not necessary. Humidity control should be considered, since higher coil temperatures resulting from reset will reduce latent heat capacity. Three reset applications are offered:

From return-fluid temperature

Increases LWT set point as return (or entering) fluid temperature decreases (indicating load decrease). Reset from return fluid may be used in any application where return fluid provides accurate load indication. Limitation of return-fluid reset is that the LWT may only be reset to value of design return-fluid temperature. No additional hardware is required.

From outdoor-air temperature

Increases LWT as outdoor ambient temperature decreases (indicating load decrease). This reset should be applied only where outdoor ambient temperature is an accurate indication of load. A field-supplied thermistor is required.

From occupied space temperature

Increases LWT as space temperature decreases (indicating load decrease). This reset should be applied only where space temperature is an accurate indication of load. A field-supplied thermistor is required.

Temperature can also be reset using a 4 to 20 mA signal from the control system. This type of reset requires the energy management module accessory.

Condenser fluid temperature

1. *Maximum* leaving condenser fluid temperature is 110°F (43°C) on all 30HXC units.
2. *Standard* 30HXC units will start at entering condenser fluid temperatures above 55°F (12.8°C). In general, however, continuous machine operation with entering condenser fluid temperatures below 70°F (21.1°C) is not recommended. When the entering condenser fluid temperature is expected to drop below 70°F (21.1°C), it is recommended that some form of condenser flow control be used to optimize performance. Tower pump, bypass valves, or flow regulating valves may be controlled by a 2 to 10, 0 to 10, or 10 to 0 VDC output from the 30HXC control (60-second open to close time recommended for actuator).

Evaporator and water-cooled condenser temperature rise

Ratings and performance data in this publication are for a cooling temperature rise of 10°F (5.6°C). Units may be operated at a different temperature rise, provided flow limits are not exceeded and corrections to capacity, etc., are made. For minimum flow rates, see the Minimum Flow Rates table. High flow rate is limited by pressure drop that can be tolerated.

Minimum evaporator flow

Flow (maximum evaporator temperature rise) is shown in the Minimum Flow Rates table. Minimum flow rate must be maintained to prevent fouling. When gpm (L/s) required is lower (or rise is higher), follow recommendations below:

1. Multiple smaller chillers can be applied in series, each providing a portion of the design temperature rise.
2. Chilled fluid can be recirculated to raise flow rate. However, mixed temperature entering evaporator must be maintained at a minimum of at least 5°F (2.8°C) above the leaving chilled fluid temperature.
3. Special plus one-pass evaporator can be used. Contact your Carrier representative for further information.

Maximum evaporator flow (> 5 gpm/ton or < 5°F rise [> 0.09 L/s · kW or < 2.7°C rise])

Maximum flow results in practical maximum pressure drop through evaporator. Special minus-one-pass evaporator can be used to reduce pressure drop. Contact your Carrier representative.

Return fluid can bypass the evaporator to keep pressure drop through evaporator within acceptable limits. This permits a higher ΔT with lower fluid flow through evaporator and mixing after the evaporator. Contact your Carrier representative if pressure drop appears excessive.

Variable evaporator flow rates

These variable rates may be applied to standard 30HX series chillers. However, the unit will attempt to maintain a constant leaving chilled-fluid temperature. In such cases, minimum fluid loop volume must be in excess of 3 gal per ton (3.2 L per kW) and flow rate must change in steps of less than 10% per minute. Apply 6 gal per ton (6.5 L per kW) fluid loop volume minimum if flow rate changes more rapidly.

Minimum water-cooled condenser flow

This value (maximum rise) is shown in Minimum Flow Rates table. Ensure leaving-fluid temperature does not exceed 105°F (40.5°C).

MINIMUM FLOW RATES

DEVICE	UNIT SIZE 30HX	NO. OF PASSES	EVAPORATOR TYPE	MIN. FLOW RATE	
				GPM	L/s
EVAPORATOR	076	1	Minus 1	136	8.6
		2	Standard	90	5.7
		3	Plus 1	68	4.3
	086	1	Minus 1	149	9.4
		2	Standard	100	6.3
		3	Plus 1	75	4.7
	096	1	Minus 1	169	10.7
		2	Standard	113	7.1
		3	Plus 1	85	5.4
	106	1	Minus 1	188	11.9
		2	Standard	125	7.9
		3	Plus 1	94	5.9
	116	1	Minus 1	272	17.2
		2	Standard	136	8.6
		3	Plus 1	91	5.7
	126	1	Minus 1	295	18.6
		2	Standard	147	9.3
		3	Plus 1	98	6.2
	136	1	Minus 1	327	20.6
		2	Standard	164	10.3
		3	Plus 1	109	6.9
	146	1	Minus 1	350	22.1
		2	Standard	175	11.0
		3	Plus 1	117	7.4
	161	1	Minus 1	380	24.0
		2	Standard	188	11.9
		3	Plus 1	121	7.6
	171	1	Minus 1	468	29.5
		2	Standard	188	11.9
		3	Plus 1	121	7.6
	186	1	Minus 1	468	29.5
		2	Standard	188	11.9
		3	Plus 1	121	7.6
	206	1	Minus 1	535	33.8
		2	Standard	270	17.0
		3	Plus 1	149	9.4
	246	1	Minus 1	593	37.4
		2	Standard	270	17.0
		3	Plus 1	191	12.1
	261	1	Minus 1	593	37.4
		2	Standard	270	17.0
		3	Plus 1	191	12.1
	271	1	Minus 1	593	37.4
		2	Standard	270	17.0
		3	Plus 1	191	12.1

DEVICE	UNIT SIZE 30HX	NO. OF PASSES	EVAPORATOR TYPE	MIN. FLOW RATE	
				GPM	L/s
CONDENSER	076	2	—	105	6.6
	086	2	—	105	6.6
	096	2	—	135	8.5
	106	2	—	135	8.5
	116	2	—	170	10.7
	126	2	—	170	10.7
	136	2	—	195	12.3
	146	2	—	195	12.3
	161	2	Minus 1	384	24.2
		2	Standard	192	12.1
	171	2	Minus 1	479	30.2
		2	Standard	232	14.6
	186	2	Minus 1	479	30.2
		2	Standard	232	14.6
	206	2	Minus 1	517	32.6
		2	Standard	257	16.2
	246	2	Minus 1	660	41.6
		2	Standard	319	20.1
	261	2	Minus 1	660	41.6
		2	Standard	319	20.1
	271	2	Minus 1	660	41.6
		2	Standard	319	20.1

NOTES:
1. The 30HX units will start with loop temperatures up to 95°F (35°C).
2. Minimum flow rate shown is based on AHRI Ratings and is for reference only. **20°F (11.1°C) is the maximum evaporator temperature differential that will determine actual minimum flow rate**.
3. To obtain proper temperature control, loop fluid volume must be at least 3 gal/ton (3.23 L/kW) of chiller nominal capacity for air conditioning and at least 6 gal/ton (6.5 L/kW) for process applications.

Oversizing chillers

Oversizing chillers by more than 15% at design conditions must be avoided as the system operating efficiency will be adversely affected (resulting in greater and/or excessive electrical demand and cycling of compressors). When future expansion of equipment is anticipated, install a single chiller to meet present load requirements, and install a second chiller to meet the additional load demand.

It is also recommended that the installation of 2 smaller chillers be considered where operation at minimum load is critical. The operation of 2 small chillers at higher loading is preferred to operating a single chiller at or near its minimum recommended value.

The minimum load control accessory should not be used as a means to allow oversizing chillers. Minimum load control should be given consideration where substantial operating time is anticipated below the minimum unloading step.

Parallel chillers

Where chiller capacities greater than can be supplied by a single 30HX chiller are required, or where stand-by capability is desired, chillers may be installed in parallel. Units may be of the same or different sizes. However, evaporator and condenser flow rates must be balanced to ensure proper flow to each chiller. The standard 30HX *Comfort*Link controls can be configured to provide lead/lag control for two chillers. The accessory Chillervisor System Manager III control may be used for proper leaving chilled fluid temperature control and to ensure proper staging sequence of up to 8 chillers. Refer to the accessory Chillervisor System Manager III installation instructions for further details.

Series chillers

Chillers in series may be used for capacities greater than those supplied by a single 30HX chiller. Using the minus-one-pass evaporator head option, fluid pressure drop across the evaporator can be held to reasonable levels. The leaving fluid temperature sensors need not be relocated. However, the evaporator minimum entering fluid temperature limitations should be considered for the chillers located downstream of other chillers. The standard 30HX control can control two 30HX chillers in series. Condensers should be piped in parallel to maximize capacity and efficiency. This should also minimize condenser pressure drop and saturated condensing temperatures. However, if condensers are piped in series, ensure that the leaving fluid temperature does not exceed 105°F (40.5°C) on standard machines.

Energy management

Demand limiting and load shedding are popular techniques used to reduce peak electric demands typically experienced during hot summer days when air conditioning loads are highest. When utility electricity demands exceed a certain level, electrical loads are turned off to keep the peak demands below a prescribed maximum limit. Compressor unloading reduces electrical demand while allowing the chiller to operate under part load capacity and to maintain partial chilled fluid cooling.

Electrical demand can be limited through demand limit input to chiller control which unloads the chiller to a predetermined percentage of the load. One stage of unloading can be initiated by a remote signal to significantly reduce the chiller power consumption. This power reduction applies to the full load power at nominal conditions. The demand limit control should not be cycled less than 10 minutes on and 5 minutes off.

Duty cycling

Duty cycling will cycle an electrical load at regular intervals, regardless of electrical demand. This reduces the electrical demand by "fooling" demand measuring devices. Duty cycling of the entire compressor is **NOT** recommended since motor windings and bearings will be damaged by constant cycling.

Wye-delta start

Wye-delta start is standard on 30HX 208/230-v, 60-Hz units and 230-v, 50-Hz units and optional on all other 30HX units. This feature is not always required on 30HX units due to the use of multiple compressors that allow small electrical load increments, but is available if required. Maximum instantaneous current flow (see ICF in Electrical Data tables on pages 36-39) should be used in determining need.

Single and dual input power options

Most chillers come standard with single input power options. However, the following chillers come standard with dual input power: 30HXA 186-271 with 208/230-3-60 or 230-3-60.

Vibration isolation

External vibration isolators are available as field-installed accessories.

Strainers

A strainer with a minimum screen size of 20 mesh must be installed in both the evaporator and condenser fluid lines, within 10 ft (3 m) of the inlets to both the evaporator and condenser. For 30HXA units, this requirement applies only to the evaporator.

Chilled fluid loop volume

The chilled fluid loop volume in circulation must equal or exceed 3 gal per nominal ton of cooling (3.2 L per kW) for temperature stability and accuracy in normal air conditioning applications. For example, a 30HXC096 with a nominal capacity of 94.0 tons would require 282 gal (1067.4 L) in circulation in the system loop.

For process jobs where accuracy is vital, or for operation at ambient temperatures below 32°F (0°C) with low unit loading conditions, there should be from 6 to 10 gal per ton (6.5 to 10.8 L per kW). To achieve this volume, it is often necessary to install a tank in the loop. Tank should be baffled to ensure there is no stratification, and that water (or brine) entering the tank is adequately mixed with liquid in the tank. See Tank Installation drawing.

TANK INSTALLATION

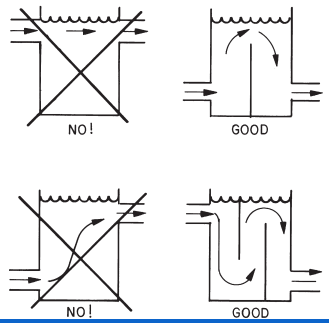

Fouling factor

The factor used to calculate tabulated ratings for the evaporator is 0.00010 $ft^2 \cdot hr \cdot F/Btu$ (0.000018 $m^2 \cdot K/W$), and for the condenser is 0.00025 $ft^2 \cdot hr \cdot F/Btu$ (0.00044 $m^2 \cdot K/W$). As fouling factor is increased, unit capacity decreases and compressor power increases. To determine selections at other fouling factors, use the chiller program in the electronic catalog.

Evaporator and water-cooled condenser freeze protection

If chiller refrigerant or fluid lines are in an area where ambient conditions fall below 32°F (0°C), it is recommended that an antifreeze solution be added to protect the unit and fluid piping to a temperature 12°F (6.7°C) below the lowest anticipated temperature. For corrections to performance, refer to the chiller program in the electronic catalog.

Use only antifreeze solutions approved for heat exchanger duty. Use of automotive antifreezes is not recommended because of the fouling that can occur once their relatively short-lived inhibitors break down.

If the system will not be used during freezing weather conditions and the chiller and fluid piping are not protected with an antifreeze solution, it is recommended that the chiller and outdoor piping be drained.

Refer to Evaporator Fluid Temperature section, page 21, for leaving fluid temperature for brine units. When leaving chilled fluid temperatures will be lower than 40°F (4.4°C), an appropriate antifreeze solution must be used in the evaporator. In addition, the following special installation instructions will apply:

1. In addition to the factory-mounted chilled water flow switch, a field-supplied condenser water flow switch must be installed.
2. The chiller must control both the chilled water pump and the condenser pump. The evaporator pump must operate for a minimum of 10 minutes after the chiller has shut down and the condenser pump must operate for a minimum of 30 minutes after the chiller has shut down. In the event of a loss of condenser water flow, the flow of chilled fluid to the evaporator must be stopped or the isolation valve must be closed. This is necessary to reduce the possibility of condenser freeze-up.
3. Condenser head pressure control valves must not reduce condenser flow below 0.75 gallons per ton (0.4 L/s per kW) or the lowest detectable flow level of the condenser water flow switch. For further information, refer to the 30HX Installation Instructions or contact your Carrier representative.

30HXA remote condenser requirements

1. Do not manifold independent refrigerant circuits into a single condenser circuit.
2. Ensure each refrigerant circuit has its own head pressure control.
3. Condensing pressure control must be provided on condensers used with 30HXA to maintain a minimum 75°F (24°C) saturated discharge temperature at light loads.
4. Condenser must provide 15°F (8.3°C) subcooling, a maximum of 40°F (22.2°C) difference between saturated condensing temperature and outdoor ambient temperature (to prevent overload at high ambient temperatures), and a minimum of 20°F (11.1°C) difference (to assure subcooling).
5. Minimum saturated discharge temperature (SDT) is 90°F (32.2°C). Maximum SDT is 145°F (62.8°C) at full load.
6. Condenser should not be located more than 15 ft (4.6 m) below chiller to maintain subcooling.
7. Design discharge and liquid piping according to the System Design Manual and Refrigerant Piping Design Program. Piping must be sized for HFC-134a refrigerant. Refer to the ASHRAE Refrigeration Handbook for R-134a refrigerant sizing tables. Also see 30HX Installation Instructions and the Typical 30HXA Refrigerant Piping to Remote Condenser diagrams on page 33.
8. For proper electronic expansion valve (EXV) operation, discharge line losses should not exceed 4°F (2.2°C) at full load. A calculation of line loss should be performed prior to installation.
9. Maximum interconnecting refrigerant line length is 200 ft (61 m) actual.
10. Liquid line solenoid valves are required.
11. If accessory sound enclosure is installed, run lines along the floor so the sound enclosure can be notched to clear lines.
12. Locate equipment on a level surface in an area having unobstructed air circulation. Proper flow of fresh air to the condenser is essential for unit operation and performance. Care should be taken to keep the area around the condensers free of airborne dirt, debris, and materials that can restrict airflow or be drawn into the equipment, causing damage, clogging, or blocking of the coil area.
13. Refer to the Recirculation Flow figure for flow information. For multiple units, assure discharge air from one unit does not become intake air for another. Obstructions such as screens, walls, roofs, overhangs, landscaping, etc., located at a site may restrict airflow or cause warm air circulation. Recirculation of warm discharge air back into a condenser can increase condensing temperatures and may significantly reduce capacity and efficiency. Unit shutdown may occur if condensing temperatures exceed the maximum set point. Airflow patterns are complex and beyond the scope of equipment manufacturer prediction. Consultation with a specialist may be required in some applications.

RECIRCULATION FLOW

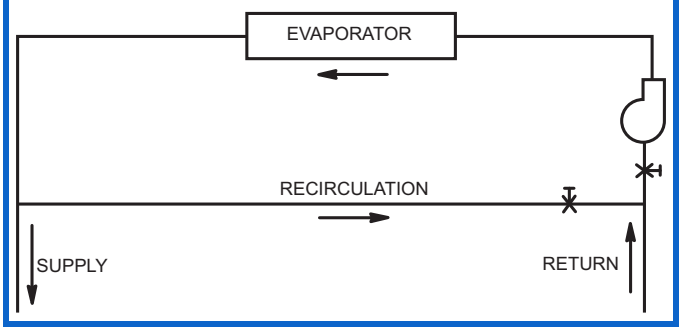

14. Units with vertical fan discharge should be located no closer than the width of the unit to an obstruction such as a wall or another unit. Minimum clearances for airflow and service are indicated on the equipment drawings and should be increased as necessary to prevent air recirculation when obstructions exist or multiple units are applied.

Refrigerant pipe sizing for 30HXA with 09D condenser combinations

For refrigerant pipe sizing of the 30HXA follow these directions:

Discharge line:

1. For applications at conditions of 40°F (4.4°C) or higher, use the Refrigerant Line Sizes for 30HXA Chiller/09DK, 09AZ Condenser Combinations tables on pages 26 and 27.
   For applications using brine, other condensers, or LWT below 40°F (4.4°C), size lines using the ASHRAE Refrigeration Handbook, or other suitable design guide.
2. Install horizontal lines level or pitched slightly toward the base of discharge riser and the condenser (in the direction of flow).
3. If chiller is below the condenser, loop the discharge line to at least one inch (25.4 mm) above the top of condenser.
4. A double discharge riser (as shown in Refrigerant Line Sizes for 30HXA Chiller/09DK, 09AZ Condenser Combinations, Double Discharge Riser Pipe Sizes table on page 27) is required if any of the following conditions exist:
   a. Unit is equipped with minimum load control.
   b. Chiller is located below condenser.
5. Minimize line length and restrictions to minimize pressure drop and refrigerant charge.
6. If accessory sound enclosure is applied, run lines along the floor so sound enclosure may be notched to clear lines.
7. Lines should not be buried underground.
8. Snow and ice on hot discharge gas piping can serve as a heat sink. Refrigerant piping exposed to the outdoors should be protected from snow and ice to prevent excessive condensation at start-up.

Liquid line:

1. For applications at conditions of 40°F (4.4°C) or higher LWT, use the Refrigerant Line Sizes for 30HXA Chiller/09DK, 09AZ Condenser Combinations tables on pages 26 and 27.
   For applications using brine, other condensers, or LWT below 40°F (4.4°C), size lines using the ASHRAE Refrigeration Handbook, or other suitable design guide.
2. If chiller is above condenser, maximum vertical separation is 15 ft (4.6 m).
3. Minimize line length and restrictions to minimize pressure drop and refrigerant charge.
4. Field-supplied liquid line solenoid valves are required. The solenoid valves must be located close to the chiller.
5. If sound enclosure is applied, run lines along floor so sound enclosure may be notched to clear lines.
6. In-line receivers are NOT recommended due to their negative effect on system subcooling. Where the use of a receiver is desired for service purposes, the receiver should be piped in parallel with the main liquid line and equipped with shut-off valves to isolate it during unit operation. See the Storage Receiver figure.

STORAGE RECEIVER

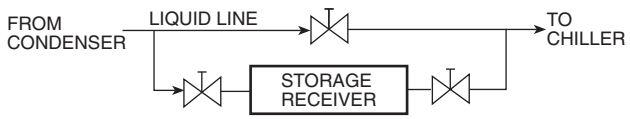

7. Filter driers (field supplied) are required indoors near chiller.

Relief valve vent lines

1. Vent per local code requirements.
2. Each chiller has a minimum of 4 refrigerant relief valves: 2 on the evaporator and 2 on the condenser (30HXC) or oil separator (30HXA). Units with factory-installed suction service valves also have one relief valve on each compressor discharge line. See Dimensions section on pages 11-18 for specific locations.
3. If sound enclosure is applied, run lines along floor so sound enclosure may be notched to clear lines.

REFRIGERANT LINE SIZES FOR 30HXA CHILLER/09DK, 09AZ CONDENSER COMBINATIONS
RECOMMENDED REFRIGERANT PIPE SIZES (in. OD)

30HXA UNIT SIZE	AIR-COOLED CONDENSER TYPE, SIZE (Qty)	CKT	TOTAL LENGTH OF INTERCONNECTING PIPING — FT (M)					
			0-50 (0-15)		50-100 (15-30)		100-200 (30-60)	
			Liquid Line*	Discharge Line†	Liquid Line*	Discharge Line†	Liquid Line*	Discharge Line†
076	09DK 084 (1)	A	1 1/8	2 1/8	1 1/8	2 1/8	1 3/8	2 1/8
		B	1 1/8	2 1/8	1 1/8	2 1/8	1 3/8	2 1/8
086	09DK 084 (1)	A	1 1/8	2 1/8	1 3/8	2 1/8	1 3/8	2 1/8
		B	1 1/8	2 1/8	1 1/8	2 1/8	1 3/8	2 1/8
096	09DK 094 (1)	A	1 1/8	2 1/8	1 3/8	2 1/8	1 5/8	2 5/8
		B	1 1/8	2 1/8	1 1/8	2 1/8	1 3/8	2 1/8
106	09DK 074 (1) and 09DK 044 (1) or 09AZV102FE (1)	A	1 3/8	2 1/8	1 3/8	2 5/8	1 5/8	2 5/8
		B	1 1/8	2 1/8	1 1/8	2 1/8	1 3/8	2 1/8
116	09DK 074 (1) and 09DK 054 (1) or 09AZV112FE (1)	A	1 3/8	2 1/8	1 3/8	2 5/8	1 5/8	2 5/8
		B	1 3/8	2 1/8	1 3/8	2 1/8	1 3/8	2 1/8
126	09DK 074 (2) or 09AZV122FE (1)	A	1 3/8	2 1/8	1 3/8	2 5/8	1 5/8	2 5/8
		B	1 3/8	2 1/8	1 3/8	2 1/8	1 5/8	2 5/8
136	09DK 074 (2) or 09AZV132FE (1)	A	1 3/8	2 5/8	1 5/8	2 5/8	1 5/8	3 1/8
		B	1 3/8	2 1/8	1 3/8	2 1/8	1 5/8	2 5/8
146	09DK 084 (2) or 09AZV142FE (1)	A	1 3/8	2 5/8	1 5/8	2 5/8	1 5/8	3 1/8
		B	1 3/8	2 1/8	1 3/8	2 5/8	1 5/8	2 5/8
161	09DK 084 (2) or 09AZV162FE (1)	A	1 3/8	2 5/8	1 5/8	2 5/8	2 1/8	3 1/8
		B	1 3/8	2 1/8	1 3/8	2 5/8	1 5/8	2 5/8
171	09DK 084 (2) or 09AZV172FE (1)	A	1 3/8	2 5/8	1 5/8	2 5/8	1 5/8	3 1/8
		B	1 3/8	2 5/8	1 5/8	2 5/8	2 1/8	3 1/8
186	09DK 084 (2) or 09AZV182FE (1)	A	1 3/8	2 5/8	1 5/8	2 5/8	2 1/8	3 1/8
		B	1 3/8	2 5/8	1 5/8	2 5/8	2 1/8	3 1/8
206	09DK 084 (2) and 09DK 094 (1) or 09AZV101FA (1) and 09AZV091FA(1)	A	1 5/8	2 5/8	1 5/8	3 1/8	2 5/8	3 1/8
		B	1 3/8	2 5/8	1 5/8	2 5/8	2 1/8	3 1/8
246	09DK 094 (3) or 09AZ 151FA (1) and 09AZV091FA(1)	A	2 1/8	3 1/8	2 5/8	3 1/8	2 5/8	3 1/8
		B	1 3/8	2 5/8	1 5/8	2 5/8	2 5/8	3 1/8
261	09DK 094 (3) or 09AZ 171FA (1) and 09AZV091FA(1)	A	2 1/8	3 1/8	2 5/8	3 1/8	2 5/8	3 1/8
		B	1 3/8	2 5/8	1 5/8	2 5/8	2 1/8	3 1/8
271	09DK 094 (3) or 09AZ 181FA (1) and 09AZV091FA(1)	A	2 1/8	3 1/8	2 5/8	3 1/8	2 5/8	3 1/8
		B	1 3/8	2 5/8	1 5/8	2 5/8	2 1/8	3 1/8

LEGEND

OD — Outside Diameter

*Field-supplied liquid line solenoid valve is required.

†Double discharge riser is required on **ALL** units which have minimum load control installed. (Please note that all 30HXA units come standard with minimum load control.) See Double Discharge Riser Pipe Sizes on page 27.

NOTES:

1. Refrigerant and Double Discharge Riser Pipe Sizes tables are based on chiller and condenser combinations listed in the above table.
2. For other system combinations, size lines per ASHRAE (American Society of Heating, Refrigerating, and Air-Conditioning Engineers) or other R-134a line sizing guides such as the System Design Manual, Part 3, or the E20-II Software Refrigerant Piping program, for proper piping sizes and design.
3. Refrigerant and Double Discharge Riser Pipe Sizes tables are based on evaporator leaving water temperatures of 40°F (4.4°C) or above.
4. Pipe diameter calculation is based on actual line length plus a 50% allowance for fittings.
5. For proper electronic expansion valve (EXV) operation, discharge line losses should not exceed 4°F (2.2°C) at full load. A calculation of line loss should be performed prior to installation.

REFRIGERANT LINE SIZES FOR 30HXA CHILLER/09DK, 09AZ CONDENSER COMBINATIONS (CONT)
DOUBLE DISCHARGE RISER PIPE SIZES (IN. OD)

30HXA UNIT SIZE	AIR-COOLED CONDENSER TYPE, SIZE (Qty)	CKT	RISER A*	RISER B*		
			Total Length of Interconnecting Piping — FT (M)†			
			0-200 (0-60)	0-50 (0-15)	50-100 (15-30)	100-200 (30-60)
076	09DK 084 (1)	A	1 1/8	1 5/8	1 5/8	1 5/8
		B	1 1/8	1 5/8	1 5/8	1 5/8
086	09DK 084 (1)	A	1 1/8	1 5/8	1 5/8	1 5/8
		B	1 1/8	1 5/8	1 5/8	1 5/8
096	09DK 094 (1)	A	1 1/8	1 5/8	1 5/8	2 1/8
		B	1 1/8	1 5/8	1 5/8	1 5/8
106	09DK 074 (1) and 09DK 044 (1) or 09AZV102FE (1)	A	1 5/8	1 5/8	2 1/8	2 1/8
		B	1 3/8	1 3/8	1 3/8	1 3/8
116	09DK 074 (1) and 09DK 054 (1) or 09AZV112FE (1)	A	1 5/8	1 5/8	2 1/8	2 1/8
		B	1 3/8	1 5/8	1 5/8	1 5/8
126	09DK 074 (2) or 09AZV122FE (1)	A	1 5/8	2 1/8	2 1/8	2 1/8
		B	1 3/8	1 5/8	1 5/8	2 1/8
136	09DK 074 (2) or 09AZV132FE (1)	A	1 5/8	2 1/8	2 1/8	2 5/8
		B	1 3/8	1 5/8	1 5/8	2 1/8
146	09DK 084 (2) or 09AZV142FE (1)	A	1 5/8	2 1/8	2 1/8	2 5/8
		B	1 5/8	1 5/8	2 1/8	2 1/8
161	09DK 084 (2) or 09AZV162FE (1)	A	1 5/8	2 1/8	2 1/8	2 5/8
		B	1 5/8	1 5/8	2 1/8	2 1/8
171	09DK 084 (2) or 09AZV172FE (1)	A	1 5/8	2 1/8	2 1/8	2 5/8
		B	1 5/8	2 1/8	2 1/8	2 5/8
186	09DK 084 (2) or 09AZV182FE (1)	A	1 5/8	2 1/8	2 1/8	2 5/8
		B	1 5/8	2 1/8	2 1/8	2 5/8
206	09DK 084 (2) and 09DK 094 (1) or 09AZV101FA (1) and 09AZV091FA(1)	A	1 5/8	2 1/8	2 1/8	2 5/8
		B	1 5/8	2 1/8	2 1/8	2 5/8
246	09DK 094 (3) or 09AZ 151FA (1) and 09AZV091FA(1)	A	1 5/8	2 1/8	2 1/8	2 5/8
		B	1 5/8	2 1/8	2 1/8	2 5/8
261	09DK 094 (3) or 09AZ 171FA (1) and 09AZV091FA(1)	A	1 5/8	2 1/8	2 1/8	3 1/8
		B	1 5/8	2 1/8	2 1/8	2 5/8
271	09DK 094 (3) or 09AZ 181FA (1) and 09AZV091FA(1)	A	1 5/8	2 1/8	3 1/8	3 1/8
		B	1 5/8	2 1/8	2 1/8	2 5/8

LEGEND

A — Riser Without Trap
B — Riser With Trap
OD — Outside Diameter

* Refer to Double Discharge Riser Construction Detail figure.
† Total Length of Interconnecting Piping refers to actual length, not total equivalent length.

NOTES:

1. Refrigerant and Double Discharge Riser Pipe Sizes tables are based on chiller and condenser combinations listed in the above table.
2. For other system combinations, size lines per ASHRAE (American Society of Heating, Refrigerating, and Air-Conditioning Engineers) or other R-134a line sizing guides such as the System Design Manual, Part 3, or the E20-II Software Refrigerant Piping program, for proper piping sizes and design.
3. Refrigerant and Double Discharge Riser Pipe Sizes tables are based on evaporator leaving water temperatures of 40°F (4.4°C) or above.
4. Pipe diameter calculation is based on actual line length plus a 50% allowance for fittings.
5. For proper electronic expansion valve (EXV) operation, discharge line losses should not exceed 4°F (2.2°C) at full load. A calculation of line loss should be performed prior to installation.
6. Horizontal line sections should be sized according to the Total Length of Interconnecting Piping columns in Recommended Refrigerant Pipe Sizes.

DOUBLE DISCHARGE RISER CONSTRUCTION DETAIL

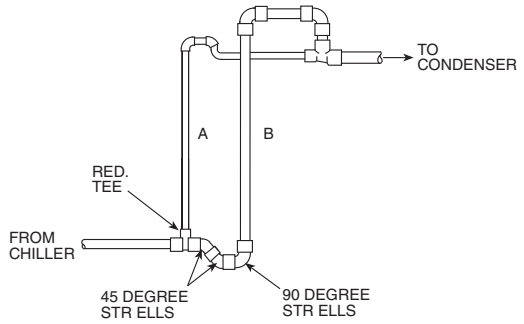

LEGEND

RED. TEE — Reducing Tee
STR ELLS — Street Elbows

For chillers using brine or those matched with other condensers, the lines must be sized manually using design guides such as ASHRAE, or curves in the 30HXA installation instructions. In many 30HXA sizes, the individual refrigerant circuits have unequal capacities. The Circuit Cooling Capacity table below lists the percentage capacity of each circuit for line sizing purposes. The Circuit Unloading Capacity table below indicates the minimum unloading capacities per circuit as well as a sample calculation of the minimum circuit tonnage for riser design. The example below lists circuit capacity calculations based on the Circuit Cooling and Circuit Unloading Capacity tables.

CIRCUIT COOLING CAPACITY

30HXA UNIT SIZE	PERCENT OF TOTAL UNIT CAPACITY	
	Circuit A %	Circuit B %
076	50	50
086	55	45
096	59	41
106	64	36
116	60	40
126	55	45
136	59	41
146	55	45
161	59	41
171	47	53
186	50	50
206	54	46
246	61	39
261	63	37
271	64	36

CIRCUIT UNLOADING CAPACITY

30HXA UNIT SIZE	MINIMUM CIRCUIT CAPACITY — PERCENT OF FULL LOAD With Minimum Load Control	
	Circuit A	Circuit B
076-186	20%	20%
206-271	10%	20%

Example Calculation of Circuit Capacities:

Select (Standard) 30HXA086 Chiller

From Electronic catalog (E-cat) selection or balance diagram:

Total Unit Capacity = 74 tons (from unit selection at design conditions)

Using the Circuit Cooling Capacity table:

Ckt "A" design capacity = 74 x 0.55 = 40.7 tons

Ckt "B" design capacity = 74 x 0.45 = 33.3 tons

Using the Circuit Unloading Capacity table:

Ckt "A" minimum capacity = 40.7 x 0.40 = 16.3 tons

Ckt "B" minimum capacity = 33.3 x 0.40 = 13.3 tons

System refrigerant charge

The 30HXA units are shipped from the factory with a small holding charge of nitrogen. The approximate refrigerant charge required for starting the 30HXA system is listed in the table on next page. This initial charge will allow starting of the unit. Additional refrigerant may be required to accommodate liquid line storage. See the liquid line refrigerant storage capacity table below for liquid line storage information.

LIQUID LINE REFRIGERANT STORAGE CAPACITY

PIPING SIZE (in.)	REFRIGERANT (lb) PER FT OF TUBING LENGTH	REFRIGERANT (kg) PER M OF TUBING LENGTH
$1^1/_8$	0.41	0.61
$1^3/_8$	0.63	0.94
$1^5/_8$	0.89	1.33
$2^1/_8$	1.52	2.26
$2^5/_8$	2.32	3.45

NOTE: Refer to Refrigerant Line Sizes table on page 26 for liquid line pipe size. To calculate the total system refrigerant charge, multiply the liquid line length (in feet) by the factor shown in this table and add it to the evaporator and condenser charge listed in Estimated System Refrigerant Charge table on page 29. Additional charge may be required for the liquid line filter drier. Consult the manufacturer for refrigerant charge information.

30HXA ESTIMATED SYSTEM REFRIGERANT CHARGE

30HXA	AIR-COOLED CONDENSER TYPE, SIZE (Qty)	REFRIGERANT CIRCUIT	EVAPORATOR CHARGE		CONDENSER CHARGE	
			Lb	Kg	Lb	Kg
076	09DK 084 (1)	A	48	22	62	28
		B	48	22	62	28
086	09DK 084 (1)	A	61	28	62	28
		B	52	24	62	28
096	09DK 094 (1)	A	75	34	68	31
		B	56	25	68	31
106	09DK 074 (1) and 09DK 044 (1)	A	88	40	82	37
		B	56	25	62	28
	09AZV102FE (1)	A	88	40	24	11
		B	56	25	18	8
116	09DK 074 (1) and 09DK 054 (1)	A	84	38	82	37
		B	61	28	56	25
	09AZV112FE (1)	A	84	38	42	19
		B	61	28	42	19
126	09DK 074 (2)	A	90	41	82	37
		B	71	32	82	37
	09AZV122FE (1)	A	90	41	24	11
		B	71	32	24	11
136	09DK 074 (2)	A	99	45	82	37
		B	71	32	82	37
	09AZV132FE (1)	A	99	45	57	26
		B	71	32	42	19
146	09DK 084 (2)	A	95	43	124	56
		B	80	36	124	56
	09AZV142FE (1)	A	95	43	57	26
		B	80	36	57	26
161	09DK 084 (2)	A	120	54	124	56
		B	88	40	124	56
	09AZV162FE (1)	A	120	54	68	31
		B	88	40	68	31
171	09DK 084 (2)	A	95	43	124	56
		B	112	51	124	56
	09AZV172FE (1)	A	95	43	68	31
		B	112	51	68	31
186	09DK 084 (2)	A	108	49	124	56
		B	108	49	124	56
	09AZV182FE (1)	A	108	49	68	31
		B	108	49	68	31
206	09DK 084 (2) and 09DK 094 (1)	A	160	73	272	123
		B	108	49	124	56
	09AZV101FA (1) and 09AZV091FA(1)	A	160	73	49	22
		B	108	49	37	17
246	09DK 094 (3)	A	176	80	272	123
		B	108	49	136	62
	09AZ 151FA (1) and 09AZV091FA(1)	A	176	80	113	51
		B	108	49	37	17
261	09DK 094 (3)	A	176	80	272	123
		B	108	49	136	62
	09AZ 171FA (1) and 09AZV091FA(1)	A	176	80	136	62
		B	108	49	37	17
271	09DK 094 (3)	A	176	80	272	123
		B	108	49	136	62
	09AZ 181FA (1) and 09AZV091FA(1)	A	176	80	136	62
		B	108	49	37	17

NOTE: To calculate total system refrigerant charge, multiply the liquid line length (in feet) by the factor shown in Liquid Line Refrigerant Storage Capacity table on page 28 and add it to the evaporator and condenser charge listed in this table. Additional charge may be required for the liquid line filter drier. Consult the manufacturer for refrigerant charge information.

Selection procedure

The electronic catalog chiller selection program provides quick, easy selection of chillers. The program considers specific temperature and flow requirements and other factors, such as fouling and altitude correction. The electronic catalog can be used to select both water-cooled 30HXC chillers and 30HXA condenserless chillers with air-cooled condensers or 30HXA chillers to be matched with other condensers. To select a 30HXC or 30HXA chiller, use the electronic catalog or contact your Carrier representative.

30HXA,HXC STANDARD PASS EVAPORATOR PRESSURE DROP

ENGLISH

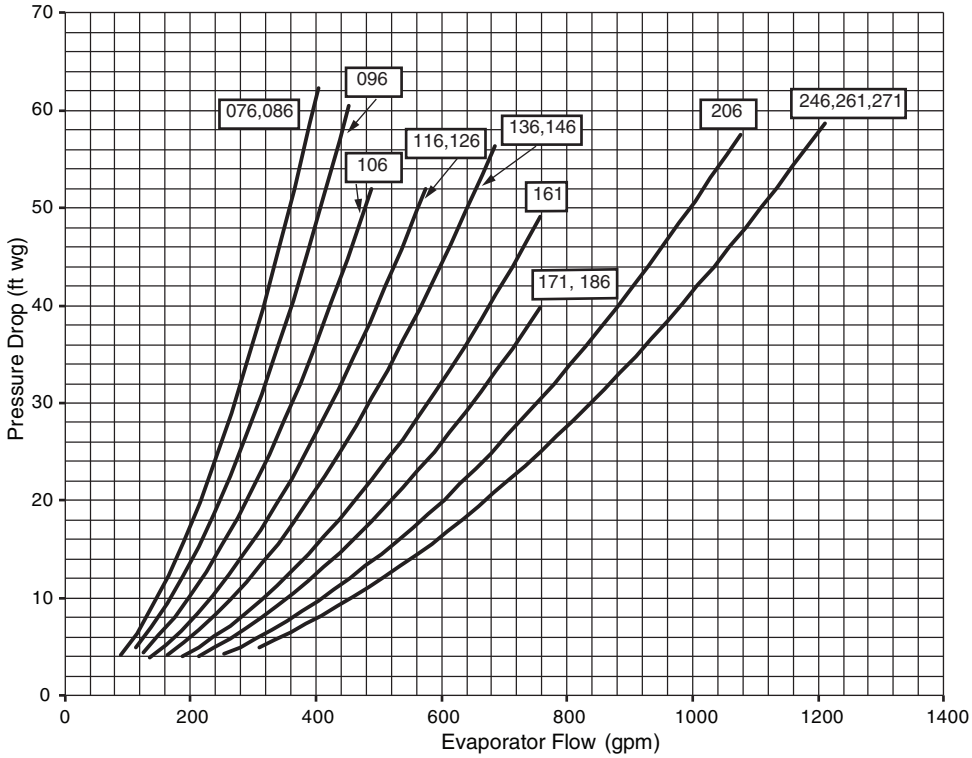

NOTES:
1. Ft of water = 2.31 x change in psig.
2. See page 22 for minimum flow rates and the electronic catalog for maximum flow rates.

SI

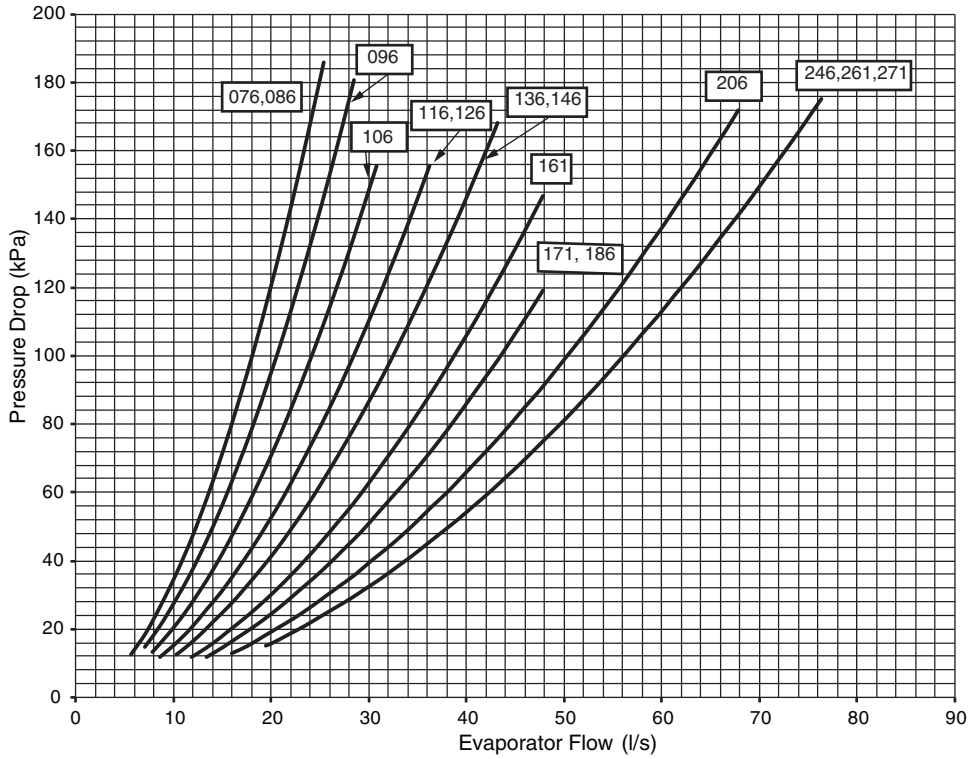

NOTE: See page 22 for minimum flow rates and the electronic catalog for maximum flow rates.

30HXC STANDARD PASS CONDENSER PRESSURE DROP

ENGLISH

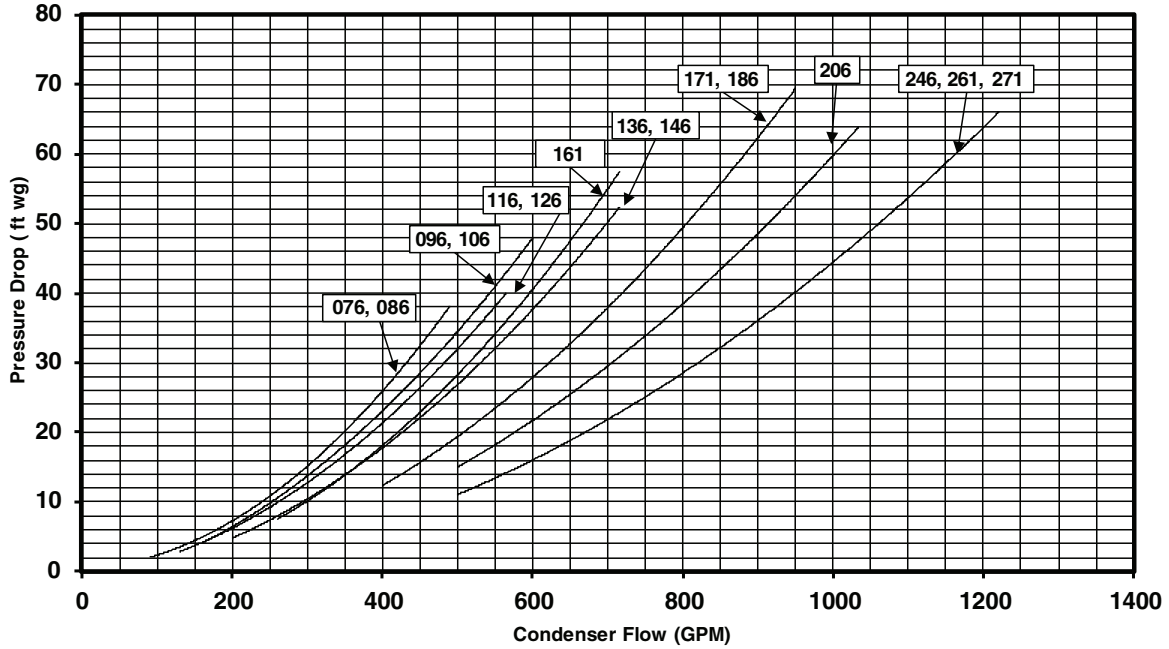

NOTES:
1. Ft of water = 2.31 x change in psig.
2. See page 22 for minimum flow rates and the electronic catalog for maximum flow rates.

SI

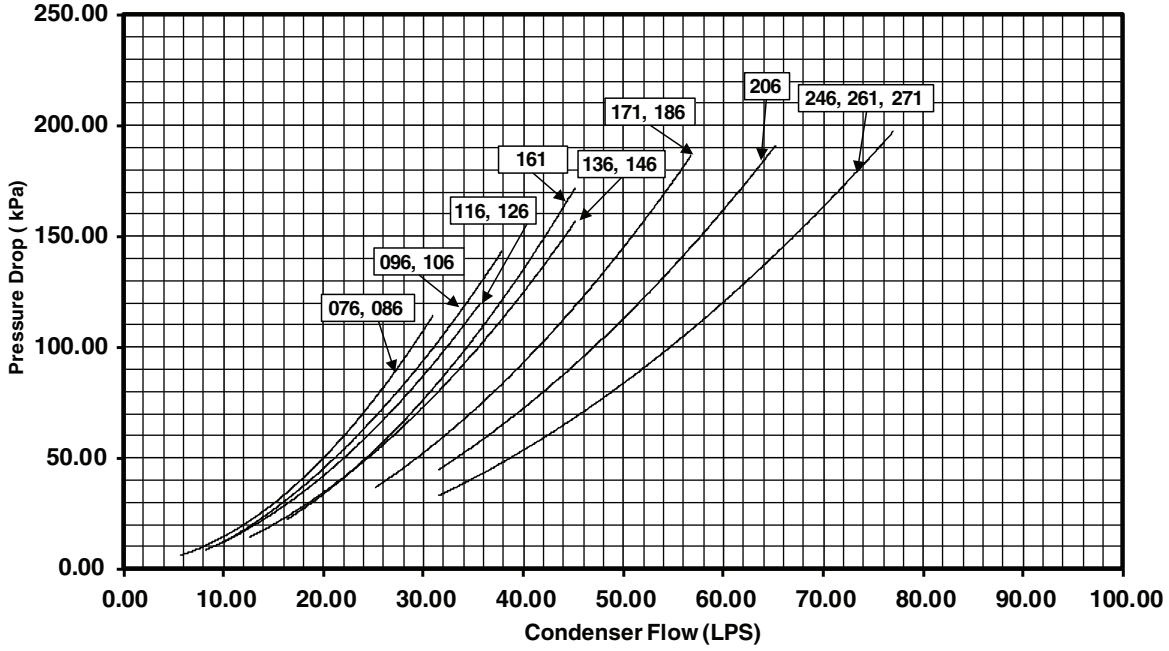

NOTE: See page 22 for minimum flow rates and the electronic catalog for maximum flow rates.

TYPICAL 30HXA REFRIGERANT PIPING TO REMOTE CONDENSER (076-096 SIZES SHOWN)

NOTES:

1. Piping shown is for general point-of-connection only and is not intended to show details for a specific installation. Certified field wiring and dimensional drawings are available upon request. The 30HXA units should be installed using certified drawings.
2. Refer to Refrigerant Line Sizes tables on pages 26 and 27 for 30HXA chiller/09DK, 09AZ condenser combination refrigerant line sizes.
3. Refer to the System Design Manual for details regarding piping techniques.
4. Refrigerant piping including liquid line solenoid valves, liquid line filter driers, and relief valves are field supplied.
5. Relief valve vent piping per local codes.
6. If unit is equipped with accessory sound enclosure, run lines down to floor and notch bottom of enclosure to clear lines.
7. When the remote condenser is equipped with Motormaster® head pressure control, the 30HXA chiller may be started with outdoor-air temperature as low as 35°F (1.7°C) and may operate at loads equal to or greater than its second stage of capacity with outdoor-air temperatures as low as 0°F (–17.8°C).
8. Operating Environment: Chiller should be installed in an indoor environment where the ambient temperature is between 40 to 104°F (4 to 40°C) with a relative humidity (non-condensing) of 95% or less. To ensure that electrical components operate properly, do not locate the chiller in an area exposed to dust, dirt, corrosive fumes, or excessive heat and humidity.

IMPORTANT: Carrier suggests that a structural engineer be consulted if transmission of vibrations from mechanical equipment is of concern.

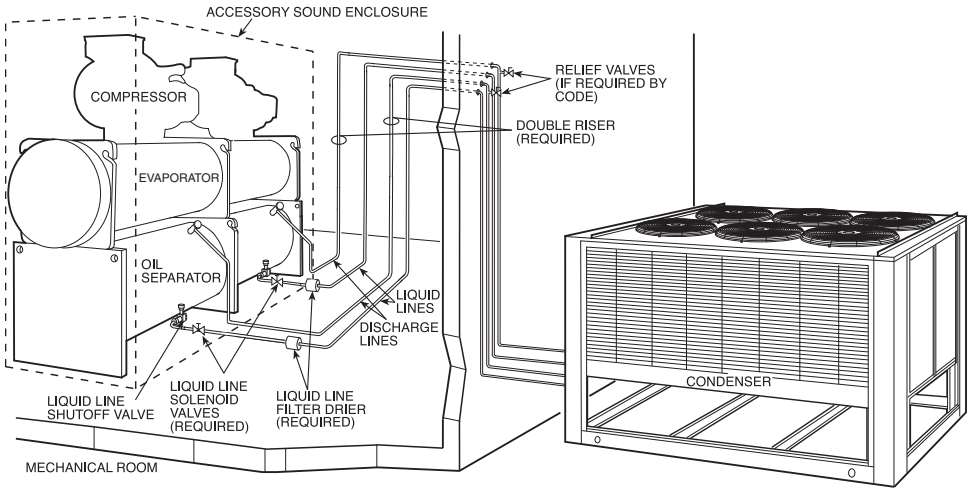

TYPICAL 30HXA REFRIGERANT PIPING TO REMOTE CONDENSER(S) (206-271 SIZES SHOWN)

NOTES:

1. Piping shown is for general point-of-connection only and is not intended to show details for a specific installation. Certified field wiring and dimensional drawings are available upon request. The 30HXA units should be installed using certified drawings.
2. Refer to Refrigerant Line Sizes tables on pages 26 and 27 for 30HXA chiller/09DK, 09AZ condenser combination refrigerant line sizes.
3. Refer to the System Design Manual for details regarding piping techniques.
4. Refrigerant piping including liquid line solenoid valves, liquid line filter driers, and relief valves are field supplied.
5. Relief valve vent piping per local codes.
6. If unit is equipped with accessory sound enclosure, run lines down to floor and notch bottom of enclosure to clear lines.
7. When the remote condenser is equipped with Motormaster head pressure control, the 30HXA chiller may be started with outdoor-air temperature as low as 35°F (1.7°C) and may operate at loads equal to or greater than its second stage of capacity with outdoor-air temperatures as low as 0°F (–17.8°C).
8. Operating Environment: Chiller should be installed in an indoor environment where the ambient temperature is between 40 to 104°F (4 to 40°C) with a relative humidity (non-condensing) of 95% or less. To ensure that electrical components operate properly, do not locate the chiller in an area exposed to dust, dirt, corrosive fumes, or excessive heat and humidity.

IMPORTANT: Carrier suggests that a structural engineer be consulted if transmission of vibrations from mechanical equipment is of concern.

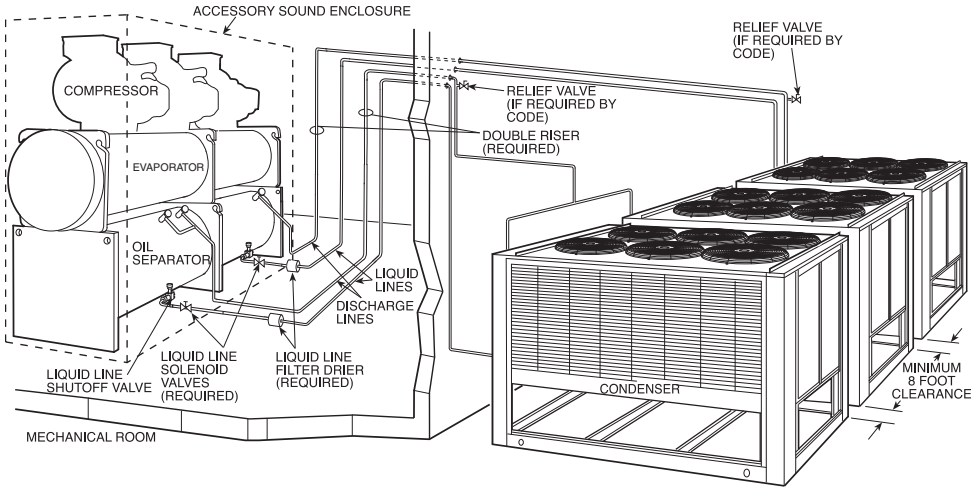

Typical piping and wiring (cont)

TYPICAL PIPING AND WIRING FOR 30HXA,HXC EVAPORATOR AND 30HXC CONDENSER

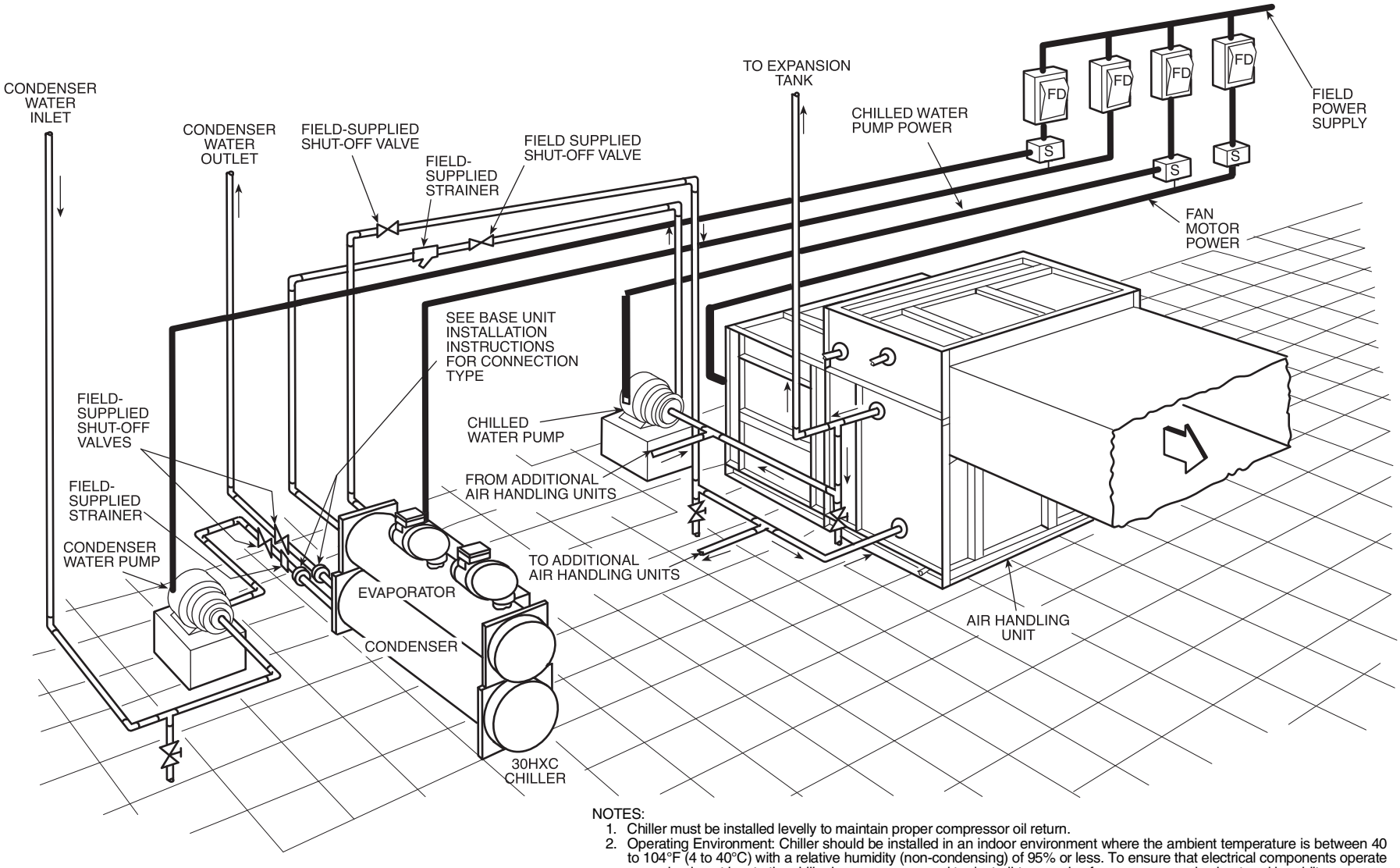

LEGEND

- ⇨ Airflow Through Air-Handling Unit
- ▬ Power Wiring
- ▬ Chilled Fluid Piping
- **S** — Starter
- **FD** — Field-Supplied Disconnect

NOTES:

1. Chiller must be installed levelly to maintain proper compressor oil return.
2. Operating Environment: Chiller should be installed in an indoor environment where the ambient temperature is between 40 to 104°F (4 to 40°C) with a relative humidity (non-condensing) of 95% or less. To ensure that electrical components operate properly, do not locate the chiller in an area exposed to dust, dirt, corrosive fumes, or excessive heat and humidity.
3. Wiring and piping shown are general points-of-connection guides only and are not intended to show details for a specific installation. Wiring and piping shown are for a quick overview of system and are not in accordance with recognized standards. Certified field wiring and dimensional diagrams are available upon request. The 30HXA and 30HXC units should be installed using certified drawings.
4. All wiring must comply with applicable local and national codes.
5. All piping must follow standard piping techniques. Refer to the System Design Manual or appropriate ASHRAE (American Society of Heating, Refrigerating, and Air-Conditioning Engineers) handbook for details regarding piping techniques.
6. Piping, wiring, switches, valves, vent gages, strainers, drain, and vibration isolation are all field supplied.
7. Water connections are shown on left side of control box in this figure. Actual connections are on right side of control box.
8. See Application Data section on page 23 for minimum evaporator loop volume. This system may require the addition of a holding tank to ensure adequate volume.

POWER AND CONTROL WIRING

STANDARD POWER

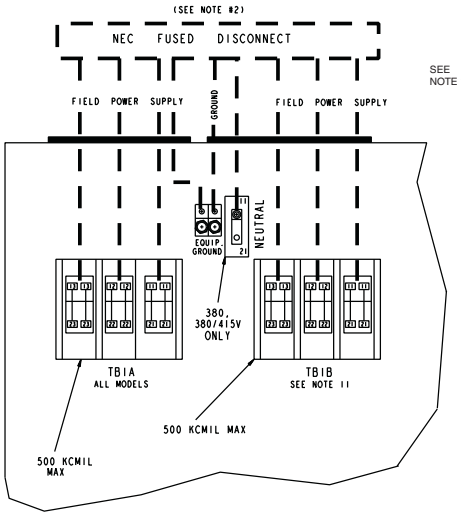

NON-FUSED DISCONNECT OPTION

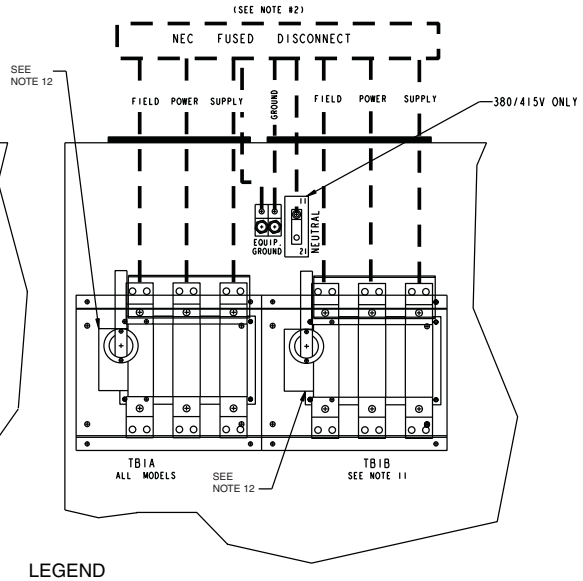

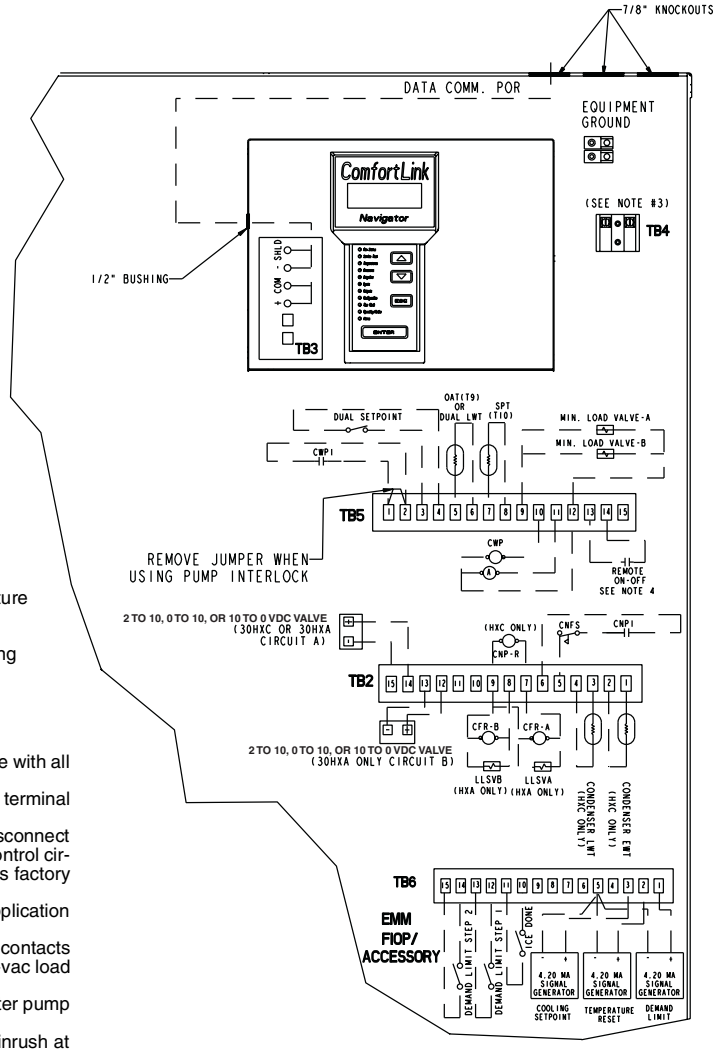

LEGEND

A	—	Alarm	**CWPI**	—	Chilled Water Pump Interlock	**OAT**	—	Outdoor Air Temperature
CFR	—	Condenser Fan Relay	**EMM**	—	Energy Management Module	**SPT**	—	Space Temperature
CNFS	—	Condenser Flow Switch	**EWT**	—	Entering Water Temperature	**TB**	—	Terminal Block
CNPI	—	Condenser Pump Interlock	**FIOP**	—	Factory-Installed Option			Factory Installed Wiring
CNPR	—	Condenser Water Pump	**LLSV**	—	Liquid Line Solenoid Valve			Field Control Wiring
CWFS	—	Chilled Water Flow Switch	**LWT**	—	Leaving Water Temperature			Field Power Wiring
CWP	—	Chilled Water Pump	**NEC**	—	National Electrical Code			

NOTES:

1. Factory wiring is in accordance with National Electrical Code (NEC). Field modifications or additions must be in compliance with all applicable codes.
2. Wiring for main field supply must be rated 75 C minimum. Use copper for all units. Maximum incoming wire size for each terminal block is 500 kcmil.
3. Power for control circuit should be supplied from a separate source (except 380/415-v units) through a field-supplied disconnect with 15 A maximum protection for 115-v control circuits and 15 A maximum protection for 230-v control circuit. Connect control circuit power to terminals 1 and 2 of TB4. Control circuit conductors for all units must be copper only. Control circuit power is factory wired for 380/415-v units.
4. Terminals 13 and 14 TB5 are for field external connection for remote on-off. The contacts must be rated for dry circuit application capable of handling a 24 vac load up to 50 mA.
5. Terminals 1 and 2 of TB5 are for chilled water pump interlock (CWPI) functions. If added, chilled water pump interlock contacts must be wired in series with flow contacts. The contacts must be rated for dry circuit application capable of handling a 24-vac load up to 50 mA. Chilled water flow switch (CWFS) is factory installed.
6. Terminals 10 and 12 of TB5 are for control of the chilled water pump starter. The maximum load allowed for the chilled water pump relay is 75 va sealed, 360 va inrush at 115 v or 230 v. Separate field power supply is not required.
7. Terminals 11 and 12 of TB5 are for alarm relay. The maximum load allowed for the alarm relay is 75 va sealed, 360 va inrush at 115 v or 230 v. Separate field power supply is not required.
8. Terminals 7 and 9 of TB2 are for condenser water pump (HXC) or circuit A condenser fan contactor (HXA only). Terminals 8 and 9 of TB2 are for circuit B contactor (HXA only) or liquid line solenoid valves (factory-wired 30HXC brine). The maximum load allowed is 75 va sealed, 360 va inrush at 115 v or 230 v. Separate field power supply is not required. Liquid line solenoid valves (30HXA only) must be connected in parallel fan contactors as shown.
9. Terminals 5 and 6 of TB2 are for condenser flow switch (CNFS) and/or condenser pump interlock (CNPI). The contacts must be rated for dry circuit application capable of handling a 24-vac load up to 50 mA.
10. Make appropriate connections to TB6 as shown for energy management board options. The contacts for demand limit and ice done options must be rated for dry circuit application capable of handling a 24vac load up to 50 mA.
11. TB1B supplied on 30HXA186, 208/230-v units with Y-Delta starter; 30HXA206-271, 208/230, 230-v units with Y-Delta starter; and by special order.
12. 500 kcmil if minimum circuit amps (MCA) > 200 A, 300 kcmil if MCA ≤ 200 A.

ELECTRICAL DATA, 30HXC UNITS

UNIT 30HXC	UNIT VOLTAGE			POWER SUPPLY QTY. REQD.	NO. POWER SUPPLY CONDUCTORS	UNIT VOLTAGE						CONTROL CIRCUIT			
	V-Hz (3 Ph)	Supplied				MCA	MOCP	ICF		Rec Fuse Size		V-Hz (Single Ph)	Supplied		MCA and MOCP
		Min	Max					XL	WD	XL	WD		Min	Max	
076	230-60	207	253	1	3	198.7	250	—	297.3	—	225	115-60	104	127	15
	208/230-60	187	253	1	3	220.7	300	—	307.1	—	250	115-60	104	127	15
	460-60	414	506	1	3	99.7	125	374.3	148.3	125	125	115-60	104	127	15
	575-60	518	633	1	3	79.7	110	299.4	118.4	90	90	115-60	104	127	15
	380-60	342	418	1	3	120.8	150	418.7	168.7	150	150	230-60	207	254	15
	380/415-50	342	440	1	3	125.6	175	399.8	164.8	150	150	230-50	198	254	15
086	230-60	207	253	1	3	221.7	300	—	297.3	—	250	115-60	104	127	15
	208/230-60	187	253	1	3	246.4	350	—	307.1	—	300	115-60	104	127	15
	460-60	414	506	1	3	111.3	150	374.3	148.3	125	125	115-60	104	127	15
	575-60	518	633	1	3	88.9	125	299.4	118.4	100	100	115-60	104	127	15
	380-60	342	418	1	3	134.8	175	418.7	168.7	175	175	230-60	207	254	15
	380/415-50	342	440	1	3	140.4	200	478.8	189.8	175	175	230-50	198	254	15
096	230-60	207	253	1	3	251.3	350	—	344.3	—	300	115-60	104	127	15
	208/230-60	187	253	1	3	279.2	400	—	354.1	—	350	115-60	104	127	15
	460-60	414	506	1	3	126.2	175	449.3	172.3	150	150	115-60	104	127	15
	575-60	518	633	1	3	100.8	150	359.4	137.4	125	125	115-60	104	127	15
	380-60	342	418	1	3	152.7	225	501.7	194.7	175	175	230-60	207	254	15
	380/415-50	342	440	1	3	157.9	225	561.8	215.8	200	200	230-50	198	254	15
106	230-60	207	253	1	3	285.6	400	—	395.3	—	350	115-60	104	127	15
	208/230-60	187	253	1	3	317.4	450	—	405.1	—	400	115-60	104	127	15
	460-60	414	506	1	3	143.3	200	529.3	197.3	175	175	115-60	104	127	15
	575-60	518	633	1	3	114.5	175	423.4	158.4	150	150	115-60	104	127	15
	380-60	342	418	1	3	173.6	250	589.7	222.7	200	200	230-60	207	254	15
	380/415-50	342	440	1	3	178.1	250	660.8	246.8	225	225	230-50	198	254	15
116	230-60	207	253	1	3	304.1	450	—	413.7	—	350	115-60	104	127	15
	208/230-60	187	253	1	3	337.9	500	—	425.6	—	400	115-60	104	127	15
	460-60	414	506	1	3	152.6	225	538.6	206.6	175	175	115-60	104	127	15
	575-60	518	633	1	3	121.9	175	430.8	165.8	150	150	115-60	104	127	15
	380-60	342	418	1	3	184.8	250	600.9	233.9	225	225	230-60	207	254	15
	380/415-50	342	440	1	3	190.0	250	672.7	258.7	225	225	230-50	198	254	15
126	230-60	207	253	1	3	327.7	450	—	437.4	—	400	115-60	104	127	15
	208/230-60	187	253	1	3	364.2	500	—	451.9	—	450	115-60	104	127	15
	460-60	414	506	1	3	164.5	225	550.5	218.5	200	200	115-60	104	127	15
	575-60	518	633	1	3	131.4	175	440.3	175.3	150	150	115-60	104	127	15
	380-60	342	418	1	3	199.1	250	615.2	248.2	225	225	230-60	207	254	15
	380/415-50	342	440	1	3	204.0	300	686.7	272.7	250	250	230-50	198	254	15
136	230-60	207	253	1	3	366.7	500	—	497.4	—	450	115-60	104	127	15
	208/230-60	187	253	1	6	407.4	600	—	511.9	—	500	115-60	104	127	15
	460-60	414	506	1	3	183.8	250	645.5	248.5	225	225	115-60	104	127	15
	575-60	518	633	1	3	147.1	200	536.3	199.3	175	175	115-60	104	127	15
	380-60	342	418	1	3	222.8	300	720.2	282.2	300	300	230-60	207	254	15
	380/415-50	342	440	1	3	230.2	300	796.7	307.7	300	300	230-50	198	254	15
146	230-60	207	253	1	6	394.1	500	—	524.9	—	450	115-60	104	127	15
	208/230-60	187	253	1	6	437.9	600	—	542.4	—	500	115-60	104	127	15
	460-60	414	506	1	3	197.5	250	659.2	262.2	225	225	115-60	104	127	15
	575-60	518	633	1	3	158.1	225	547.3	210.3	200	200	115-60	104	127	15
	380-60	342	418	1	3	239.5	350	736.9	298.9	300	300	230-60	207	254	15
	380/415-50	342	440	1	3	246.3	350	812.8	323.8	300	300	230-50	198	254	15
161	230-60	207	253	1	6	398.7	600	—	574.8	—	500	115-60	104	127	15
	208/230-60	187	253	1	6	443.0	600	—	590.6	—	600	115-60	104	127	15
	460-60	414	506	1	3	200.1	300	756.2	287.2	250	250	115-60	104	127	15
	575-60	518	633	1	3	159.9	225	604.9	229.9	200	200	115-60	104	127	15
	380-60	342	418	1	3	242.2	350	843.2	325.2	300	300	230-60	207	254	15
	380/415-50	342	440	1	3	249.0	350	944.2	358.2	300	300	230-50	198	254	15

See Legend and Notes on page 37.

ELECTRICAL DATA, 30HXC UNITS (CONT)

UNIT 30HXC	UNIT VOLTAGE			POWER SUPPLY QTY. REQD.	NO. POWER SUPPLY CONDUCTORS	UNIT VOLTAGE						CONTROL CIRCUIT			
	V-Hz (3 Ph)	Supplied				MCA	MOCP	ICF		Rec Fuse Size		V-Hz (Single Ph)	Supplied		MCA and MOCP
		Min	Max					XL	WD	XL	WD		Min	Max	
171	230-60	207	253	1	6	428.4	600	—	604.5	—	500	115-60	104	127	15
	208/230-60	187	253	1	6	476.0	700	—	623.6	—	600	115-60	104	127	15
	460-60	414	506	1	3	215.0	300	771.1	302.1	250	250	115-60	104	127	15
	575-60	518	633	1	3	171.8	250	616.8	241.8	200	200	115-60	104	127	15
	380-60	342	418	1	3	260.2	350	861.2	343.2	300	300	230-60	207	254	15
	380/415-50	342	440	1	3	266.6	350	961.8	375.8	300	300	230-50	198	254	15
186	230-60	207	253	1	6	462.3	600	—	638.5	—	600	115-60	104	127	15
	208/230-60	187	253	1	6	513.7	700	—	661.3	—	600	115-60	104	127	15
	460-60	414	506	1	3	232.0	300	788.1	319.1	300	300	115-60	104	127	15
	575-60	518	633	1	3	185.4	250	630.4	255.4	225	225	115-60	104	127	15
	380-60	342	418	1	3	280.8	400	881.8	363.8	350	350	230-60	207	254	15
	380/415-50	342	440	1	3	289.4	400	984.6	398.6	350	350	230-50	198	254	15
206	230-60	207	253	1	6	524.5	700	—	700.7	—	600	115-60	104	127	15
	208/230-60	187	253	1	6	582.8	800	—	730.4	—	700	115-60	104	127	15
	460-60	414	506	1	3	263.2	350	819.3	350.3	300	300	115-60	104	127	15
	575-60	518	633	1	3	210.4	250	655.4	280.4	250	250	115-60	104	127	15
	380-60	342	418	1	3	318.6	400	919.6	401.6	350	350	230-60	207	254	15
	380/415-50	342	440	1	3	326.8	450	1022.0	436.0	400	400	230-50	198	254	15
246	230-60	207	253	1	6	604.1	800	—	780.3	—	700	115-60	104	127	15
	208/230-60	187	253	1	6	671.3	800	—	818.9	—	800	115-60	104	127	15
	460-60	414	506	1	3	303.2	400	859.3	390.3	350	350	115-60	104	127	15
	575-60	518	633	1	3	242.3	300	687.3	312.3	300	300	115-60	104	127	15
	380-60	342	418	1	3	367.0	450	968.0	450.0	400	400	230-60	207	254	15
	380/415-50	342	440	1	3	377.6	500	1072.8	486.8	450	450	230-50	198	254	15
261	230-60	207	253	1	6	633.8	800	—	810.0	—	700	115-60	104	127	15
	208/230-60	187	253	1	6	704.3	800	—	851.9	—	800	115-60	104	127	15
	460-60	414	506	1	3	318.1	400	874.2	405.2	350	350	115-60	104	127	15
	575-60	518	633	1	3	254.2	300	699.2	324.2	300	300	115-60	104	127	15
	380-60	342	418	1	6	385.0	500	986.0	468.0	450	450	230-60	207	254	15
	380/415-50	342	440	1	6	395.2	500	1090.4	504.4	450	450	230-50	198	254	15
271	230-60	207	253	1	6	667.8	800	—	843.9	—	800	115-60	104	127	15
	208/230-60	187	253	1	6	742.0	800	—	889.6	—	800	115-60	104	127	15
	460-60	414	506	1	3	335.1	400	891.2	422.2	400	400	115-60	104	127	15
	575-60	518	633	1	3	267.8	350	712.8	337.8	300	300	115-60	104	127	15
	380-60	342	418	1	6	405.6	500	1006.6	488.6	450	450	230-60	207	254	15
	380/415-50	342	440	1	6	418.0	500	1113.2	527.2	500	500	230-50	198	254	15

LEGEND

ICF — Maximum Instantaneous Current Flow during start-up (the point in the starting sequence where the sum of the LRA for the start-up compressor, plus the total RLA for all running compressors is at a maximum)
LRA — Locked Rotor Amps
MCA — Minimum Circuit Ampacity (for wire sizing)
MOCP — Maximum Overcurrent Protection
RLA — Rated Load Amps
WD — Wye-Delta Start
XL — Across-the-Line Start

NOTES:
1. Each main power source must be supplied from a field-supplied fused electrical service with a (factory-installed or field-installed) disconnect located in sight from the unit.
2. Control circuit power must be supplied from a separate source through a field-supplied disconnect (except for 380/415-50 units). An accessory control transformer may be used to provide control circuit power from the main unit power supply.
3. Maximum incoming wire size for each terminal block is 500 kcmil.
4. Maximum allowable phase imbalance is: voltage, 2%; amps, 5%.
5. Use copper conductors only.
6. The MOCP is calculated as follows:
   MOCP = (2.25) (largest RLA) + the sum of the other RLAs. Size the fuse one size down from the result. The RLAs are listed on the nameplate.
   The recommended fuse size in amps (RFA) is calculated as follows:
   RFA = (1.50) (largest RLA) + the sum of the other RLAs. Size the fuse one size up from the result. The RLAs are listed on the nameplate.
   MCA = (1.25) (largest RLA) + the sum of the other RLAs. Size the wires one size up from the result.

C ETL LISTED US
Intertek

ELECTRICAL DATA, 30HXA UNITS

UNIT 30HXA	UNIT VOLTAGE			POWER SUPPLY QTY. REQD.	NO. POWER SUPPLY CONDUCTORS	UNIT VOLTAGE						CONTROL CIRCUIT			
	V-Hz (3 Ph)	Supplied				MCA	MOCP	ICF		Rec Fuse Size		V-Hz (Single Ph)	Supplied		MCA and MOCP
		Min	Max					XL	WD	XL	WD		Min	Max	
076	230-60	207	253	1	3	291.2	400	—	436.4	—	350	115-60	104	127	15
	208/230-60	187	253	1	3	323.6	450	—	450.8	—	400	115-60	104	127	15
	460-60	414	506	1	3	146.0	200	549.9	217.9	175	175	115-60	104	127	15
	575-60	518	633	1	3	116.8	150	439.9	174.9	150	150	115-60	104	127	15
	380-60	342	418	1	3	177.1	250	614.7	247.7	200	200	230-60	207	254	15
	380/415-50	342	440	1	3	183.4	250	686.5	272.5	225	225	230-50	198	254	15
086	230-60	207	253	1	3	322.8	450	—	496.4	—	400	115-60	104	127	15
	208/230-60	187	253	1	3	358.7	500	—	510.8	—	450	115-60	104	127	15
	460-60	414	506	1	3	161.9	225	644.9	247.9	200	200	115-60	104	127	15
	575-60	518	633	1	3	129.5	175	535.9	198.9	150	150	115-60	104	127	15
	380-60	342	418	1	3	196.2	250	719.7	281.7	225	225	230-60	207	254	15
	380/415-50	342	440	1	3	205.5	300	796.5	307.5	250	250	230-50	198	254	15
096	230-60	207	253	1	3	365.4	500	—	562.4	—	450	115-60	104	127	15
	208/230-60	187	253	1	6	406.1	600	—	576.8	—	500	115-60	104	127	15
	460-60	414	506	1	3	183.4	250	749.9	280.9	225	225	115-60	104	127	15
	575-60	518	633	1	3	146.5	200	599.9	224.9	175	175	115-60	104	127	15
	380-60	342	418	1	3	222.1	300	835.7	317.7	300	300	230-60	207	254	15
	380/415-50	342	440	1	3	231.4	350	937.5	351.5	300	300	230-50	198	254	15
106	230-60	207	253	1	6	416.9	600	—	647.4	—	500	115-60	104	127	15
	208/230-60	187	253	1	6	463.2	700	—	661.8	—	600	115-60	104	127	15
	460-60	414	506	1	3	209.2	300	884.9	323.9	250	250	115-60	104	127	15
	575-60	518	633	1	3	167.2	250	707.9	258.9	200	200	115-60	104	127	15
	380-60	342	418	1	3	253.3	350	984.7	364.7	300	300	230-60	207	254	15
	380/415-50	342	440	1	3	263.3	400	1041.5	384.5	300	300	230-50	198	254	15
116	230-60	207	253	1	6	442.1	600	—	672.7	—	500	115-60	104	127	15
	208/230-60	187	253	1	6	491.3	700	—	689.9	—	600	115-60	104	127	15
	460-60	414	506	1	3	221.9	300	897.6	336.6	300	300	115-60	104	127	15
	575-60	518	633	1	3	177.4	250	718.1	269.1	225	225	115-60	104	127	15
	380-60	342	418	1	3	268.6	400	1000.0	380.0	350	350	230-60	207	254	15
	380/415-50	342	440	1	3	281.0	400	1059.2	402.2	350	350	230-50	198	254	15
126	230-60	207	253	1	6	476.3	700	—	706.8	—	600	115-60	104	127	15
	208/230-60	187	253	1	6	529.2	700	—	727.8	—	600	115-60	104	127	15
	460-60	414	506	1	3	239.1	350	914.8	353.8	300	300	115-60	104	127	15
	575-60	518	633	1	3	191.0	250	731.7	282.7	225	225	115-60	104	127	15
	380-60	342	418	1	3	289.3	400	1020.7	400.7	350	350	230-60	207	254	15
	380/415-50	342	440	1	3	301.7	400	1079.9	422.9	350	350	230-50	198	254	15
136	230-60	207	253	1	6	539.1	800	—	769.8	—	700	115-60	104	127	15
	208/230-60	187	253	1	6	599.1	800	—	790.8	—	700	115-60	104	127	15
	460-60	414	506	1	3	270.7	400	1014.8	385.8	350	350	115-60	104	127	15
	575-60	518	633	1	3	216.2	300	811.7	308.7	250	250	115-60	104	127	15
	380-60	342	418	1	3	327.5	450	1131.7	435.7	400	400	230-60	207	254	15
	380/415-50	342	440	1	3	343.4	500	1345.9	506.9	400	400	230-50	198	254	15
146	230-60	207	253	1	6	580.3	800	—	811.0	—	700	115-60	104	127	15
	208/230-60	187	253	1	6	644.8	800	—	836.5	—	800	115-60	104	127	15
	460-60	414	506	1	3	291.3	400	1035.4	406.4	350	350	115-60	104	127	15
	575-60	518	633	1	3	232.7	300	828.2	325.2	300	300	115-60	104	127	15
	380-60	342	418	1	3	352.5	500	1156.7	460.7	400	400	230-60	207	254	15
	380/415-50	342	440	1	3	368.9	500	1371.4	532.4	450	450	230-50	198	254	15
161	230-60	207	253	1	6	605.6	800	—	955.3	—	700	115-60	104	127	15
	208/230-60	187	253	1	6	672.9	1000	—	978.9	—	800	115-60	104	127	15
	460-60	414	506	1	3	304.0	450	1281.6	477.6	350	350	115-60	104	127	15
	575-60	518	633	1	3	242.9	350	1025.1	382.1	300	300	115-60	104	127	15
	380-60	342	418	1	3	368.0	500	1428.0	539.0	450	450	230-60	207	254	15
	380/415-50	342	440	1	6	384.9	500	1398.4	533.4	450	450	230-50	198	254	15
171	230-60	207	253	1	6	651.5	800	—	1001.2	—	800	115-60	104	127	15
	208/230-60	187	253	1	6	723.9	1000	—	1029.9	—	1000	115-60	104	127	15
	460-60	414	506	1	3	327.0	450	1304.6	500.6	400	400	115-60	104	127	15
	575-60	518	633	1	3	261.4	350	1043.6	400.6	300	300	115-60	104	127	15
	380-60	342	418	1	6	395.9	500	1455.9	566.9	450	450	230-60	207	254	15
	380/415-50	342	440	1	6	413.2	600	1426.7	561.7	500	500	230-50	198	254	15

See Legend and Notes on page 39.

ELECTRICAL DATA, 30HXA UNITS (CONT)

UNIT 30HXA	UNIT VOLTAGE			POWER SUPPLY QTY. REQD.	NO. POWER SUPPLY CONDUCTORS	UNIT VOLTAGE						CONTROL CIRCUIT			
	V-Hz (3 Ph)	Supplied				MCA	MOCP	ICF		Rec Fuse Size		V-Hz (Single Ph)	Supplied		MCA and MOCP
		Min	Max					XL	WD	XL	WD		Min	Max	
186	230-60	207	253	1	6	707.9	1000	—	1057.6	—	800	115-60	104	127	15
	208/230-60	—	—	—	—	—	—	—	—	—	—	115-60	104	127	15
	Ckt A	187	253	1	6	437.0	700	—	743.0	—	600	—	—	—	—
	Ckt B	187	253	1	6	437.0	700	—	743.0	—	600	—	—	—	—
	460-60	414	506	1	3	355.3	500	1332.9	528.9	400	400	115-60	104	127	15
	575-60	518	633	1	3	284.0	400	1066.2	423.2	350	350	115-60	104	127	15
	380-60	342	418	1	6	430.2	600	1490.2	601.2	500	500	230-60	207	254	15
	380/415-50	342	440	1	6	452.7	600	1466.2	601.2	600	600	230-50	198	254	15
206	230-60	—	—	—	—	—	—	—	—	—	—	115-60	104	127	15
	Ckt A	207	253	1	6	468.6	700	—	726.8	—	600	—	—	—	—
	Ckt B	207	253	1	3	379.8	600	—	743.0	—	500	—	—	—	—
	208/230-60	—	—	—	—	—	—	—	—	—	—	115-60	104	127	15
	Ckt A	187	253	1	6	520.6	800	—	743.0	—	600	—	—	—	—
	Ckt B	187	253	1	6	422.0	700	—	743.0	—	600	—	—	—	—
	460-60	414	506	1	6	400.1	500	1377.7	573.7	450	450	115-60	104	127	15
	575-60	518	633	1	3	319.9	400	1102.1	459.1	400	400	115-60	104	127	15
	380-60	342	418	1	6	484.4	600	1544.4	655.4	600	600	230-60	207	254	15
	380/415-50	342	440	1	6	505.2	700	1518.7	653.7	600	600	230-50	198	254	15
246	230-60	—	—	—	—	—	—	—	—	—	—	115-60	104	127	15
	Ckt A	207	253	1	6	592.1	800	—	955.3	—	700	—	—	—	—
	Ckt B	207	253	1	3	379.8	600	—	743.0	—	500	—	—	—	—
	208/230-60	—	—	—	—	—	—	—	—	—	—	115-60	104	127	15
	Ckt A	187	253	1	6	657.9	800	—	978.9	—	800	—	—	—	—
	Ckt B	187	253	1	6	422.0	700	—	743.0	—	600	—	—	—	—
	460-60	414	506	1	6	461.9	600	1439.5	635.5	600	600	115-60	104	127	15
	575-60	518	633	1	3	369.1	450	1151.3	508.3	450	450	115-60	104	127	15
	380-60	342	418	1	6	559.2	700	1619.2	730.2	700	700	230-60	207	254	15
	380/415-50	342	440	1	6	586.1	700	1599.6	734.6	700	700	230-50	198	254	15
261	230-60	—	—	—	—	—	—	—	—	—	—	115-60	104	127	15
	Ckt A	207	253	1	6	638.0	800	—	1001.2	—	800	—	—	—	—
	Ckt B	207	253	1	3	379.8	600	—	743.0	—	500	—	—	—	—
	208/230-60	—	—	—	—	—	—	—	—	—	—	115-60	104	127	15
	Ckt A	187	253	1	6	708.9	1000	—	1029.9	—	800	—	—	—	—
	Ckt B	187	253	1	6	422.0	700	—	743.0	—	600	—	—	—	—
	460-60	414	506	1	6	484.9	600	1462.5	658.5	600	600	115-60	104	127	15
	575-60	518	633	1	6	387.6	500	1169.8	526.8	450	450	115-60	104	127	15
	380-60	342	418	1	6	587.1	700	1647.1	758.1	700	700	230-60	207	254	15
	380/415-50	342	440	1	6	614.4	800	1627.9	762.9	700	700	230-50	198	254	15
271	230-60	—	—	—	—	—	—	—	—	—	—	115-60	104	127	15
	Ckt A	207	253	1	6	683.6	800	—	1046.8	—	800	—	—	—	—
	Ckt B	207	253	1	3	379.8	600	—	743.0	—	500	—	—	—	—
	208/230-60	—	—	—	—	—	—	—	—	—	—	115-60	104	127	15
	Ckt A	187	253	1	6	759.6	1000	—	1080.6	—	1000	—	—	—	—
	Ckt B	187	253	1	6	422.0	700	—	743.0	—	600	—	—	—	—
	460-60	414	506	1	6	513.2	600	1490.8	686.8	600	600	115-60	104	127	15
	575-60	518	633	1	6	410.2	500	1192.4	549.4	450	450	115-60	104	127	15
	380-60	342	418	1	6	621.4	800	1681.4	792.4	700	700	230-60	207	254	15
	380/415-50	342	440	1	6	653.9	800	1667.4	802.4	800	800	230-50	198	254	15

LEGEND

ICF — Maximum Instantaneous Current Flow during start-up (the point in the starting sequence where the sum of the LRA for the start-up compressor, plus the total RLA for all running compressors is at a maximum)
LRA — Locked Rotor Amps
MCA — Minimum Circuit Ampacity (for wire sizing)
MOCP — Maximum Overcurrent Protection
RLA — Rated Load Amps
WD — Wye-Delta Start
XL — Across-the-Line Start

NOTES:
1. Each main power source must be supplied from a field-supplied fused electrical service with a (factory-installed or field-installed) disconnect located in sight from the unit.
2. Control circuit power must be supplied from a separate source through a field-supplied disconnect (except for 380/415-50 units). An accessory control transformer may be used to provide control circuit power from the main unit power supply.
3. Maximum incoming wire size for each terminal block is 500 kcmil.
4. Maximum allowable phase imbalance is: voltage, 2%; amps, 5%.
5. Use copper conductors only.
6. The MOCP is calculated as follows:
MOCP = (2.25) (largest RLA) + the sum of the other RLAs. Size the fuse one size down from the result. The RLAs are listed on the nameplate.
The recommended fuse size in amps (RFA) is calculated as follows:
RFA = (1.50) (largest RLA) + the sum of the other RLAs. Size the fuse one size up from the result. The RLAs are listed on the nameplate.
MCA = (1.25) (largest RLA) + the sum of the other RLAs. Size the wires one size up from the result.

C ETL LISTED US
Intertek

Electrical data (cont)

COMPRESSOR ELECTRICAL DATA, 30HXC UNITS

UNIT SIZE 30HXC	NAMEPLATE V-Hz (3 Phase)	COMPRESSOR NUMBERS			
		A1		B1	
		RLA	LRA	RLA	LRA
076-XL	208/230-60	*	*	*	*
	230-60	*	*	*	*
	460-60	44.3	330	44.3	330
	575-60	35.4	264	35.4	264
	380-60	53.7	365	53.7	365
	380/415-50	55.8	344	55.8	344
076-WD	208/230-60	98.1	209	98.1	209
	230-60	88.3	209	88.3	209
	460-60	44.3	104	44.3	104
	575-60	35.4	83	35.4	83
	380-60	53.7	115	53.7	115
	380/415-50	55.8	109	55.8	109
086-XL	208/230-60	*	*	*	*
	230-60	*	*	*	*
	460-60	53.6	330	44.3	330
	575-60	42.8	264	35.4	264
	380-60	64.9	365	53.7	365
	380/415-50	67.7	423	55.8	344
086-WD	208/230-60	118.6	209	98.1	209
	230-60	106.7	209	88.3	209
	460-60	53.6	104	44.3	104
	575-60	42.8	83	35.4	83
	380-60	64.9	115	53.7	115
	380/415-50	67.7	134	55.8	109
096-XL	208/230-60	*	*	*	*
	230-60	*	*	*	*
	460-60	65.5	405	44.3	330
	575-60	52.3	324	35.4	264
	380-60	79.2	448	53.7	365
	380/415-50	81.7	506	55.8	344
096-WD	208/230-60	144.9	256	98.1	209
	230-60	130.4	256	88.3	209
	460-60	65.5	128	44.3	104
	575-60	52.3	102	35.4	83
	380-60	79.2	141	53.7	115
	380/415-50	81.7	160	55.8	109
106-XL	208/230-60	*	*	*	*
	230-60	*	*	*	*
	460-60	79.2	485	44.3	330
	575-60	63.3	388	35.4	264
	380-60	95.9	536	53.7	365
	380/415-50	97.8	605	55.8	344
106-WD	208/230-60	175.4	307	98.1	209
	230-60	157.9	307	88.3	209
	460-60	79.2	153	44.3	104
	575-60	63.3	123	35.4	83
	380-60	95.9	169	53.7	115
	380/415-50	97.8	191	55.8	109

LEGEND

LRA — Locked Rotor Amps
RLA — Rated Load Amps
WD — Wye-Delta Start
XL — Across-the-Line Start

* Units are shipped with Wye-Delta start as standard. Across-the-line start is not available.

COMPRESSOR ELECTRICAL DATA, 30HXC UNITS (CONT)

UNIT SIZE 30HXC	NAMEPLATE V-Hz (3 Phase)	COMPRESSOR NUMBERS			
		A1		B1	
		RLA	LRA	RLA	LRA
116-XL	208/230-60	*	*	*	*
	230-60	*	*	*	*
	460-60	79.2	485	53.6	330
	575-60	63.3	388	42.8	264
	380-60	95.9	536	64.9	365
	380/415-50	97.8	605	67.7	423
116-WD	208/230-60	175.4	307	118.6	209
	230-60	157.9	307	106.7	209
	460-60	79.2	153	53.6	104
	575-60	63.3	123	42.8	83
	380-60	95.9	169	64.9	115
	380/415-50	97.8	191	67.7	134
126-XL	208/230-60	*	*	*	*
	230-60	*	*	*	*
	460-60	79.2	485	65.5	405
	575-60	63.3	388	52.3	324
	380-60	95.9	536	79.2	448
	380/415-50	97.8	605	81.7	506
126-WD	208/230-60	175.4	307	144.9	256
	230-60	157.9	307	130.4	256
	460-60	79.2	153	65.5	128
	575-60	63.3	123	52.3	102
	380-60	95.9	169	79.2	141
	380/415-50	97.8	191	81.7	160
136-XL	208/230-60	*	*	*	*
	230-60	*	*	*	*
	460-60	94.6	580	65.5	405
	575-60	75.8	484	52.3	324
	380-60	114.9	641	79.2	448
	380/415-50	118.8	715	81.7	506
136-WD	208/230-60	210.0	367	144.9	256
	230-60	189.0	367	130.4	256
	460-60	94.6	183	65.5	128
	575-60	75.8	147	52.3	102
	380-60	114.9	203	79.2	141
	380/415-50	118.8	226	81.7	160
146-XL	208/230-60	*	*	*	*
	230-60	*	*	*	*
	460-60	94.6	580	79.2	485
	575-60	75.8	484	63.3	388
	380-60	114.9	641	95.9	536
	380/415-50	118.8	715	97.8	605
146-WD	208/230-60	210.0	367	175.4	307
	230-60	189.0	367	157.9	307
	460-60	94.6	183	79.2	153
	575-60	75.8	147	63.3	123
	380-60	114.9	203	95.9	169
	380/415-50	118.8	226	97.8	191

LEGEND

LRA — Locked Rotor Amps
RLA — Rated Load Amps
WD — Wye-Delta Start
XL — Across-the-Line Start

* Units are shipped with Wye-Delta start as standard. Across-the-line start is not available.

COMPRESSOR ELECTRICAL DATA, 30HXC UNITS (CONT)

UNIT SIZE 30HXC	NAMEPLATE V-Hz (3 Phase)	COMPRESSOR NUMBERS			
		A1		B1	
		RLA	LRA	RLA	LRA
161-XL	208/230-60	*	*	*	*
	230-60	*	*	*	*
	460-60	103.1	685	71.2	525
	575-60	82.4	548	56.9	420
	380-60	124.8	757	86.2	580
	380/415-50	128.6	856	88.2	600
161-WD	208/230-60	228.8	433	157.6	350
	230-60	205.5	433	141.8	350
	460-60	103.1	216	71.2	175
	575-60	82.4	173	56.9	140
	380-60	124.8	239	86.2	193
	380/415-50	128.6	270	88.2	200
171-XL	208/230-60	*	*	*	*
	230-60	*	*	*	*
	460-60	86.1	580	103.1	685
	575-60	68.8	484	82.4	548
	380-60	104.2	641	124.8	757
	380/415-50	105.8	715	128.6	856
171-WD	208/230-60	190.6	367	228.8	433
	230-60	171.5	367	205.5	433
	460-60	86.1	183	103.1	216
	575-60	68.8	147	82.4	173
	380-60	104.2	203	124.8	239
	380/415-50	105.8	233	128.6	270
186-XL	208/230-60	*	*	*	*
	230-60	*	*	*	*
	460-60	103.1	685	103.1	685
	575-60	82.4	548	82.4	548
	380-60	124.8	757	124.8	757
	380/415-50	128.6	856	128.6	856
186-WD	208/230-60	228.8	433	228.8	433
	230-60	205.5	433	205.5	433
	460-60	103.1	216	103.1	216
	575-60	82.4	173	82.4	173
	380-60	124.8	239	124.8	239
	380/415-50	128.6	270	128.6	270

LEGEND

LRA — Locked Rotor Amps
RLA — Rated Load Amps
WD — Wye-Delta Start
XL — Across-the-Line Start

* Units are shipped with Wye-Delta start as standard. Across-the-line start is not available.

COMPRESSOR ELECTRICAL DATA, 30HXC UNITS (CONT)

UNIT SIZE 30HXC	NAMEPLATE V-Hz (3 Phase)	COMPRESSOR NUMBERS					
		A1		A2		B1	
		RLA	LRA	RLA	LRA	RLA	LRA
206-XL	208/230-60	*	*	*	*	*	*
	230-60	*	*	*	*	*	*
	460-60	86.1	580	48.2	350	103.1	685
	575-60	68.8	484	38.6	280	82.4	548
	380-60	104.2	641	58.4	390	124.8	757
	380/415-50	105.8	715	55.8	344	128.6	856
206-WD	208/230-60	190.6	367	106.8	233	228.8	433
	230-60	171.5	367	96.1	233	205.5	433
	460-60	86.1	183	48.2	117	103.1	216
	575-60	68.8	147	38.6	93	82.4	173
	380-60	104.2	203	58.4	130	124.8	239
	380/415-50	105.8	226	60.2	150	128.6	270
246-XL	208/230-60	*	*	*	*	*	*
	230-60	*	*	*	*	*	*
	460-60	103.1	685	71.2	485	103.1	685
	575-60	82.4	548	56.9	388	82.4	548
	380-60	124.8	757	86.2	536	124.8	757
	380/415-50	128.6	856	88.2	605	128.6	856
246-WD	208/230-60	228.8	433	157.6	307	228.8	433
	230-60	205.5	433	141.8	307	205.5	433
	460-60	103.1	216	71.2	153	103.1	216
	575-60	82.4	173	56.9	123	82.4	173
	380-60	124.8	239	86.2	169	124.8	239
	380/415-50	128.6	270	88.2	191	128.6	270
261-XL	208/230-60	*	*	*	*	*	*
	230-60	*	*	*	*	*	*
	460-60	103.1	685	86.1	580	103.1	685
	575-60	82.4	548	68.8	484	82.4	548
	380-60	124.8	757	104.2	641	124.8	757
	380/415-50	128.6	856	105.8	715	128.6	856
261-WD	208/230-60	228.8	433	190.6	367	228.8	433
	230-60	205.5	433	171.5	367	205.5	433
	460-60	103.1	216	86.1	183	103.1	216
	575-60	82.4	173	68.8	147	82.4	173
	380-60	124.8	239	104.2	203	124.8	239
	380/415-50	128.6	270	105.8	226	128.6	270
271-XL	208/230-60	*	*	*	*	*	*
	230-60	*	*	*	*	*	*
	460-60	103.1	685	103.1	685	103.1	685
	575-60	82.4	548	82.4	548	82.4	548
	380-60	124.8	757	124.8	757	124.8	757
	380/415-50	128.6	856	128.6	856	128.6	856
271-WD	208/230-60	228.8	433	228.8	433	228.8	433
	230-60	205.5	433	205.5	433	205.5	433
	460-60	103.1	216	103.1	216	103.1	216
	575-60	82.4	173	82.4	173	82.4	173
	380-60	124.8	239	124.8	239	124.8	239
	380/415-50	128.6	270	128.6	270	128.6	270

LEGEND

LRA — Locked Rotor Amps
RLA — Rated Load Amps
WD — Wye-Delta Start
XL — Across-the-Line Start

* Units are shipped with Wye-Delta start as standard. Across-the-line start is not available.

Electrical data (cont)

COMPRESSOR ELECTRICAL DATA, 30HXA UNITS

UNIT SIZE 30HXA	NAMEPLATE V-Hz (3 Phase)	COMPRESSOR NUMBERS			
		A1		B1	
		RLA	LRA	RLA	LRA
076-XL	208/230-60	*	*	*	*
	230-60	*	*	*	*
	460-60	64.9	485	64.9	485
	575-60	51.9	388	51.9	388
	380-60	78.7	536	78.7	536
	380/415-50	81.5	605	81.5	605
076-WD	208/230-60	143.8	307	143.8	307
	230-60	129.4	307	129.4	307
	460-60	64.9	153	64.9	153
	575-60	51.9	123	51.9	123
	380-60	78.7	169	78.7	169
	380/415-50	81.5	191	81.5	191
086-XL	208/230-60	*	*	*	*
	230-60	*	*	*	*
	460-60	77.6	580	64.9	485
	575-60	62.1	484	51.9	388
	380-60	94.0	641	78.7	536
	380/415-50	99.2	715	81.5	605
086-WD	208/230-60	171.9	367	143.8	307
	230-60	154.7	367	129.4	307
	460-60	77.6	183	64.9	153
	575-60	62.1	147	51.9	123
	380-60	94.0	203	78.7	169
	380/415-50	99.2	226	81.5	191
096-XL	208/230-60	*	*	*	*
	230-60	*	*	*	*
	460-60	94.8	685	64.9	485
	575-60	75.7	548	51.9	388
	380-60	114.7	757	78.7	536
	380/415-50	119.9	856	81.5	605
096-WD	208/230-60	209.8	433	143.8	307
	230-60	188.8	433	129.4	307
	460-60	94.8	216	64.9	153
	575-60	75.7	173	51.9	123
	380-60	114.7	239	78.7	169
	380/415-50	119.9	270	81.5	191
106-XL	208/230-60	*	*	*	*
	230-60	*	*	*	*
	460-60	115.4	820	64.9	485
	575-60	92.2	656	51.9	388
	380-60	139.7	906	78.7	536
	380/415-50	145.4	960	81.5	605
106-WD	208/230-60	255.5	518	143.8	307
	230-60	230.0	518	129.4	307
	460-60	115.4	259	64.9	153
	575-60	92.2	207	51.9	123
	380-60	139.7	286	78.7	169
	380/415-50	145.4	303	81.5	191

LEGEND

LRA — Locked Rotor Amps
RLA — Rated Load Amps
WD — Wye-Delta Start
XL — Across-the-Line Start

* Units are shipped with Wye-Delta start as standard. Across-the-line start is not available.

COMPRESSOR ELECTRICAL DATA, 30HXA UNITS (CONT)

UNIT SIZE 30HXA	NAMEPLATE V-Hz (3 Phase)	COMPRESSOR NUMBERS			
		A1		B1	
		RLA	LRA	RLA	LRA
116-XL	208/230-60	*	*	*	*
	230-60	*	*	*	*
	460-60	115.4	820	77.6	580
	575-60	92.2	656	62.1	484
	380-60	139.7	906	94.0	641
	380/415-50	145.4	960	99.2	715
116-WD	208/230-60	255.5	518	171.9	367
	230-60	230.0	518	154.7	367
	460-60	115.4	259	77.6	183
	575-60	92.2	207	62.1	147
	380-60	139.7	286	94.0	203
	380/415-50	145.4	303	99.2	226
126-XL	208/230-60	*	*	*	*
	230-60	*	*	*	*
	460-60	115.4	820	94.8	685
	575-60	92.2	656	75.7	548
	380-60	139.7	906	114.7	757
	380/415-50	145.4	960	119.9	856
126-WD	208/230-60	255.5	518	209.8	433
	230-60	230.0	518	188.8	433
	460-60	115.4	259	94.8	216
	575-60	92.2	207	75.7	173
	380-60	139.7	286	114.7	239
	380/415-50	145.4	303	119.9	270
136-XL	208/230-60	*	*	*	*
	230-60	*	*	*	*
	460-60	140.7	920	94.8	685
	575-60	112.4	736	75.7	548
	380-60	170.2	1017	114.7	757
	380/415-50	178.8	1226	119.9	856
136-WD	208/230-60	311.4	581	209.8	433
	230-60	280.3	581	188.8	433
	460-60	140.7	291	94.8	216
	575-60	112.4	233	75.7	173
	380-60	170.2	321	114.7	239
	380/415-50	178.8	387	119.9	270
146-XL	208/230-60	*	*	*	*
	230-60	*	*	*	*
	460-60	140.7	920	115.4	820
	575-60	112.4	736	92.2	656
	380-60	170.2	1017	139.7	906
	380/415-50	178.8	1226	145.4	960
146-WD	208/230-60	311.4	581	255.5	518
	230-60	280.3	581	230.0	518
	460-60	140.7	291	115.4	259
	575-60	112.4	233	92.2	207
	380-60	170.2	321	139.7	286
	380/415-50	178.8	387	145.4	303

LEGEND

LRA — Locked Rotor Amps
RLA — Rated Load Amps
WD — Wye-Delta Start
XL — Across-the-Line Start

* Units are shipped with Wye-Delta start as standard. Across-the-line start is not available.

COMPRESSOR ELECTRICAL DATA, 30HXA UNITS (CONT)

UNIT SIZE 30HXA	NAMEPLATE V-Hz (3 Phase)	COMPRESSOR NUMBERS			
		A1		B1	
		RLA	LRA	RLA	LRA
161-XL	208/230-60	*	*	*	*
	230-60	*	*	*	*
	460-60	157.9	1175	106.6	790
	575-60	126.2	940	85.1	630
	380-60	191.2	1299	129.0	870
	380/415-50	201.2	1265	133.4	1045
161-WD	208/230-60	349.6	743	235.9	527
	230-60	314.6	743	212.3	527
	460-60	157.9	371	106.6	263
	575-60	126.2	297	85.1	211
	380-60	191.2	410	129.0	290
	380/415-50	201.2	400	133.4	348
171-XL	208/230-60	*	*	*	*
	230-60	*	*	*	*
	460-60	129.6	920	157.9	1175
	575-60	103.6	736	126.2	940
	380-60	156.9	1017	191.2	1299
	380/415-50	161.7	1226	201.2	1265
171-WD	208/230-60	286.9	581	349.6	743
	230-60	258.2	581	314.6	743
	460-60	129.6	291	157.9	371
	575-60	103.6	233	126.2	297
	380-60	156.9	321	191.2	410
	380/415-50	161.7	387	201.2	400
186-XL	208/230-60	*	*	*	*
	230-60	*	*	*	*
	460-60	157.9	1175	157.9	1175
	575-60	126.2	940	126.2	940
	380-60	191.2	1299	191.2	1299
	380/415-50	201.2	1265	201.2	1265
186-WD	208/230-60	349.6	743	349.6	743
	230-60	314.6	743	314.6	743
	460-60	157.9	371	157.9	371
	575-60	126.2	297	126.2	297
	380-60	191.2	410	191.2	410
	380/415-50	201.2	400	201.2	400

LEGEND

LRA — Locked Rotor Amps
RLA — Rated Load Amps
WD — Wye-Delta Start
XL — Across-the-Line Start

* Units are shipped with Wye-Delta start as standard. Across-the-line start is not available.

COMPRESSOR ELECTRICAL DATA, 30HXA UNITS (CONT)

UNIT SIZE 30HXA	NAMEPLATE V-Hz (3 Phase)	COMPRESSOR NUMBERS					
		A1		A2		B1	
		RLA	LRA	RLA	LRA	RLA	LRA
206-XL	208/230-60	*	*	*	*	*	*
	230-60	*	*	*	*	*	*
	460-60	129.6	920	73.1	580	157.9	1175
	575-60	103.6	736	58.5	484	126.2	940
	380-60	156.9	1017	88.5	641	191.2	1299
	380/415-50	161.7	1226	92.0	715	201.2	1265
206-WD	208/230-60	286.9	581	162.0	367	337.6	743
	230-60	258.2	581	145.8	367	303.8	743
	460-60	129.6	291	73.1	183	157.9	371
	575-60	103.6	233	58.5	147	126.2	297
	380-60	156.9	321	88.5	203	191.2	410
	380/415-50	161.7	387	92.0	226	201.2	400
246-XL	208/230-60	*	*	*	*	*	*
	230-60	*	*	*	*	*	*
	460-60	157.9	1175	106.6	820	157.9	1175
	575-60	126.2	940	85.1	656	126.2	940
	380-60	191.2	1299	129.0	906	191.2	1299
	380/415-50	201.2	1265	133.4	960	201.2	1265
246-WD	208/230-60	337.6	743	235.9	518	337.6	743
	230-60	303.8	743	212.3	518	303.8	743
	460-60	157.9	371	106.6	259	157.9	371
	575-60	126.2	297	85.1	207	126.2	297
	380-60	191.2	410	129.0	286	191.2	410
	380/415-50	201.2	400	133.4	303	201.2	400
261-XL	208/230-60	*	*	*	*	*	*
	230-60	*	*	*	*	*	*
	460-60	157.9	1175	129.6	920	157.9	1175
	575-60	126.2	940	103.6	736	126.2	940
	380-60	191.2	1299	156.9	1017	191.2	1299
	380/415-50	201.2	1265	161.7	1226	201.2	1265
261-WD	208/230-60	337.6	743	286.9	581	337.6	743
	230-60	303.8	743	258.2	581	303.8	743
	460-60	157.9	371	129.6	291	157.9	371
	575-60	126.2	297	103.6	233	126.2	297
	380-60	191.2	410	156.9	321	191.2	410
	380/415-50	201.2	400	161.7	387	201.2	400
271-XL	208/230-60	*	*	*	*	*	*
	230-60	*	*	*	*	*	*
	460-60	157.9	1175	157.9	1175	157.9	1175
	575-60	126.2	940	126.2	940	126.2	940
	380-60	191.2	1299	191.2	1299	191.2	1299
	380/415-50	201.2	1265	201.2	1265	201.2	1265
271-WD	208/230-60	337.6	743	337.6	743	337.6	743
	230-60	303.8	743	303.8	743	303.8	743
	460-60	157.9	371	157.9	371	157.9	371
	575-60	126.2	297	126.2	297	126.2	297
	380-60	191.2	410	191.2	410	191.2	410
	380/415-50	201.2	400	201.2	400	201.2	400

LEGEND

LRA — Locked Rotor Amps
RLA — Rated Load Amps
WD — Wye-Delta Start
XL — Across-the-Line Start

* Units are shipped with Wye-Delta start as standard. Across-the-line start is not available.

Controls

The standard microprocessor-based control in the 30HX units provides the following functions:

- leaving evaporator fluid control in COOL mode (using both entering and leaving fluid sensors)
- leaving condenser fluid control in HEAT mode (using field-installed accessory entering and leaving fluid sensors)
- 7-day time sequence of both pump and chiller
- temperature reset from return fluid (standard) or from outdoor ambient (accessory), occupied space temperature (accessory), 4 to 20 mA signal (accessory), or via the optional Carrier Comfort Network® (CCN) system
- automatic compressor lead-lag switching based on compressor accumulated run times and number of cycles
- automatic temperature range across the evaporator adjustment
- fully automatic control of the chiller components

A 4-line, 20-character per line display is used to accomplish the following (see figure below):

- set schedules and set points
- identify operating mode
- display current temperatures and pressures being used by the control for internal calculations
- identify abnormal (alarm or alert) conditions

NAVIGATOR™ DISPLAY MODULE — STANDARD

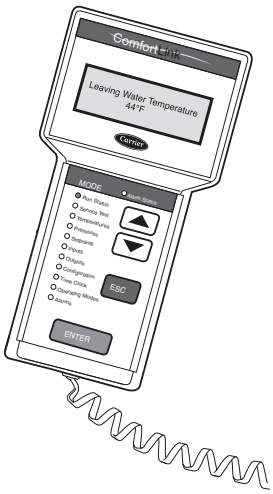

Sequence of operation

The control has a 44°F (6.2°C) leaving fluid temperature (LWT) set point as shipped from the factory. If temperature reset or demand limiting is in effect, this set point may change.

Start-up

The chiller will start when the circulating pump is energized. (If the flow switch is applied, the chiller starts after the flow has been proven.) The compressor starts unloaded.

NOTE: Which compressor starts first is determined by the automatic lead/lag feature.

If the entering fluid temperature is 85°F (29°C) or higher, the maximum operating pressure (MOP) feature limits the suction pressure to keep the chiller on line.

Normal operation

The entering fluid temperature sensor monitors changes in entering fluid temperature to anticipate changes in the cooling load. Based on leaving fluid temperature, the control adds or subtracts capacity to maintain a constant leaving fluid temperature.

Dual chiller control

The dual chiller routine is available for the control of two units supplying chilled fluid on a common loop.

In parallel flow applications, an additional leaving fluid temperature thermistor must be installed and connected to the lead chiller.

Transition to off

The chiller unloads once the "time-to-stop" signal has been given. This signal can be either internal or external.

Safeties

The 30HX control as shipped from the factory automatically de-energizes any active compressor that experiences any of the following:

- electrical overload
- thermal overload protection
- high pressure
- low oil pressure
- loss of refrigerant charge
- loss of phase protection
- reverse rotation (control prevents compressor start)
- current imbalance
- ground current
- low chilled fluid temperature

Additional information

Detailed information on controls and operation is available in the Controls, Start-Up, Operation and Troubleshooting guide included with each unit. Packaged Service Training programs are also available. Contact your Carrier representative for more information.

Water-Cooled and Condenserless HVAC Guide Specifications

Size Range: **75 to 265 Nominal Tons (264 to 931 kW)**

Carrier Model Number: **30HXA — Condenserless**
30HXC — Water-Cooled

Part 1 — General

1.01 SYSTEM DESCRIPTION

Microprocessor controlled water-cooled (30HXC) or condenserless (30HXA) liquid chiller utilizing screw compressors and electronic expansion valves.

1.02 QUALITY ASSURANCE

A. Unit shall be rated in accordance with AHRI Standard 550/590, latest edition (U.S.A.). The 60 Hz 30HXC units shall be AHRI certified for performance.

B. Unit construction shall comply with ASHRAE 15 Safety Code, NEC, and ASME applicable codes (U.S.A. codes), latest version.

C. The management system governing the manufacture of this product is ISO (International Organization for Standardization) 9001:2015 certified.

D. 208/230 v, 230 v, 460 v, 575 v, 60 Hz units shall be constructed in accordance with UL or UL Canada standards and shall be tested and listed by ETL or ETL, Canada, as conforming to those standards. Units shall carry the ETL and ETL, Canada, labels.

1.03 DELIVERY, STORAGE, AND HANDLING

A. Unit controls shall be capable of withstanding 150°F (66°C) storage temperatures in the control compartment.

B. When delivered, machine and starter should be stored indoors, protected from construction dirt and moisture. Inspect under shipping tarps, bags, or crates to be sure water has not collected during transit. Protective shipping covers should be kept in place until machine is ready for installation.

Part 2 — Products

2.01 EQUIPMENT

A. General:

Factory assembled, single-piece, water-cooled (30HXC) or condenserless (30HXA) liquid chiller with dual (2) independent refrigerant circuits. Contained within the unit cabinet shall be all factory wiring, piping, controls, refrigerant charge (HFC-134a) (30HXA units shipped with holding charge only), and special features required prior to field start-up. Unit must fit through a standard door.

B. Compressors:

1. Semi-hermetic twin-screw compressors with internal muffler and check valve.
2. Each compressor shall be equipped with a discharge shutoff valve.

C. Evaporator:

1. Shall be tested and stamped in accordance with ASME Code (U.S.A.) for a refrigerant working-side pressure of 220 psig (1408 kPa). Water-side pressure rating shall be 300 psig (2068 kPa). In Canada, maximum water-side pressure shall be 250 psig (1725 kPa), per the Canadian National Registry.
2. Shall be mechanically cleanable shell-and-tube type with removable heads.
3. Tubes shall be internally enhanced, seamless-copper type and shall be rolled into tube sheets. Tube wall thickness shall be 0.025 inches.
4. Shall be equipped with Victaulic fluid connections.
5. Shell shall be insulated with $^3/_4$-in. (19-mm) closed-cell, polyvinyl chloride foam with a maximum K factor of 0.28. Heads may require field insulation.
6. Shall have a evaporator drain and vent.
7. Design shall incorporate 2 independent refrigerant circuits.
8. Shall include isolation valves to allow isolation of the refrigerant charge in either the evaporator or the condenser.
9. Shall be equipped with factory-installed thermal dispersion chilled fluid flow switch.

D. Condenser (30HXC units):

1. Shall be tested and stamped in accordance with ASME code (U.S.A.) for a refrigerant working-side pressure of 220 psig (1408 kPa). Water-side pressure rating shall be 300 psig (2068 kPa). In Canada, maximum water-side pressure shall be 250 psig (1725 kPa), per the Canadian National Registry.
2. Shall be mechanically cleanable shell-and-tube type with removable heads.
3. Tubes shall be internally enhanced, seamless-copper type, and shall be rolled into tube sheets. Tube wall thickness shall be 0.025 inches.
4. Shall be equipped with Victaulic water connections.
5. Design shall incorporate 2 independent refrigerant circuits.

E. Oil Separator (30HXA Units):

1. Shall be tested and stamped in accordance with ASME Code (U.S.A.) for a refrigerant working-side pressure of 320 psig (2206 kPa).
2. Design shall incorporate 2 independent refrigerant circuits.

F. Refrigeration Components:

Refrigerant circuit components shall include oil separator, high and low side pressure relief devices, discharge and liquid line shutoff valves, filter drier (on 30HXC unit only), moisture-indicating sight glass, expansion valve, refrigerant economizer (unit sizes 161-271), and complete charge of compressor oil. The 30HXC units shall have a complete operating charge of refrigerant HFC-134a; 30HXA units shall have a holding charge of nitrogen.

G. Controls, Safeties, and Diagnostics:

1. Controls:

a. Unit controls shall include the following minimum components:

1) Microprocessor with non-volatile memory. Battery backup system shall not be accepted.
2) Power and control circuit terminal blocks.
3) ON/OFF control switch.
4) Replaceable solid-state relay panels.
5) Thermistor installed to measure saturated condensing temperature, evaporator saturation temperature, compressor return gas temperature, and evaporator entering and leaving fluid temperatures.
6) Chilled fluid thermal dispersion flow switch.

b. Unit controls shall include the following functions as standard:

1) Automatic circuit lead/lag.
2) Capacity control based on leaving chilled fluid temperature and compensated by rate of change of return-fluid temperature with temperature set point accuracy to 0.1°F (0.06°C).
3) Limiting the chilled fluid temperature pull-down rate at start-up to an adjustable range of 0.2°F to 2°F (0.11° C to 1.1°C) per minute to prevent excessive demand spikes at start-up.
4) Seven-day time schedule.
5) Leaving chilled fluid temperature reset from return fluid, outdoor-air temperature, space temperature, or 4 to 20 mA input.
6) Demand limit control with 2-stage control (0 to 100% each) or through 4 to 20 mA input (0 to 100%).
7) Chilled and condenser water pump start/stop control.
8) Dual chiller control for series chiller applications without addition of hardware modules or additional thermistors.
9) Dual chiller control for parallel flow applications use one additional sensor.
10) Amperage readout per compressor with %MTA (must trip amps) per compressor.

c. NEMA 1 control panel shall include, as standard, a portable hand held display module with a minimum of 4 lines and 20 characters per line, of clear English, Spanish, Portuguese or French language. Display menus shall provide clear language descriptions of all menu items, operating modes, configuration points and alarm diagnostics. Reference to factory codes shall not be accepted. An industrial grade coiled extension cord shall allow the display module to be moved around the chiller. Magnets shall hold the display module to any sheet metal panel to allow hands-free operation. Display module shall have NEMA 4x housing suitable for use in outdoor environments. Display shall have back light and contrast adjustment for easy viewing in bright sunlight or night conditions. The display module shall have raised surface buttons with positive tactile response.

d. The chiller controller shall include multiple connection ports for communicating with the local equipment network and the Carrier Comfort Network® (CCN) system, and the ability to access all chiller control functions from any point on the chiller.

e. The control system shall allow software upgrade without the need for new hardware modules.

2. Safeties:

Unit shall be equipped with thermistors and all necessary components in conjunction with the control system to provide the unit with the following protections:

a. Loss of refrigerant charge.
b. Reverse rotation.
c. Low chilled fluid temperature.
d. Low oil pressure (each compressor circuit).
e. Ground current fault.
f. Thermal overload.
g. High pressure.
h. Electrical overload.
i. Loss of phase.
j. Current imbalance.
k. Loss of flow.

3. Diagnostics:

a. The display module shall be capable of indicating the safety lockout condition by displaying the information in clear language at the display. Information included for display shall be:

1) Compressor lockout.
2) Loss of charge.
3) Low fluid flow.
4) Low oil pressure.
5) Evaporator freeze protection.
6) High or low suction superheat.
7) Thermistor malfunction.
8) Entering and leaving-fluid temperature.
9) Evaporator and condenser pressure.
10) Electronic expansion valve positions.
11) All set points.
12) Time of day.

b. Display module, in conjunction with the microprocessor, must also be capable of displaying the output results of a service test. Service test shall verify operation of every

switch, thermistor, and compressor before chiller is started. User shall be able to force each output device.

c. Diagnostics shall include the ability to review a list of the 20 most recent alarms with clear language descriptions of the alarm event. Display of alarm codes without the ability for clear language descriptions shall be prohibited.

d. An alarm history buffer shall allow the user to store no fewer than 20 alarm events with clear language descriptions and time and date stamp event entry.

H. Operating Characteristics:

Unit shall be capable of starting up with 95°F (35°C) entering fluid temperature to the evaporator.

I. Electrical Requirements:

1. Unit primary electrical power supply shall enter the unit at a single location (some units have multiple power poles).
2. Unit shall operate on 3-phase power at the voltage shown in the equipment schedule.
3. Control voltage shall be 115-v (60 Hz) or 230-v (50 Hz), single-phase, separate power supply.
4. Unit shall be shipped with factory control and power wiring installed.

J. Special Features:

Certain standard features are not applicable when the features designated by * are specified. For assistance in amending the specifications, contact your local Carrier Sales office.

* 1. Wye-Delta Starter:

Unit shall have a factory-installed, Wye-Delta starter to minimize electrical inrush current.

2. Sound Reduction Enclosure:

Unit shall have field-installed sound reduction enclosure which covers the entire unit to muffle compressor noise.

3. Vibration Isolation:

Chiller manufacturer shall furnish neoprene isolator pads for mounting equipment on a level, concrete surface.

4. Control Power Transformer:

Unit shall be supplied with a field-installed transformer that will supply control circuit power from the main unit power supply.

5. Temperature Reset Sensor:

Unit shall reset leaving chilled fluid temperature based on outdoor ambient temperature or space temperature when this sensor is installed.

* 6. Brine Option:

Unit shall be factory modified to start and operate at leaving chilled fluid temperatures of between 15°F (–9°C) and 40°F (4.4°C).

* 7. Minimum Load Control:

Unit shall be equipped with factory (or field) installed, microprocessor-controlled, minimum load control that shall permit unit operation down to 10% of full capacity.

8. Chillerviser System Manager:

Control shall enable management of multiple parallel chillers (up to 8) or two (2) chillers in series in a single system.

9. Minus-One-Pass Evaporator:

Factory-installed option shall reduce pressure drop for high flow applications. Shall also provide same end inlet and outlet for 076-106 sizes and opposite end inlet for 116-271 sizes.

10. Plus-One-Pass Evaporator:

Factory-installed option shall enhance low temperature brine performance.

11. Suction Service Valves:

Unit shall be supplied with factory-installed suction service valves to isolate compressor from evaporator and condenser.

12. Evaporator Head Insulation:

Unit shall be supplied with field-installed evaporator insulation that shall cover the evaporator heads.

13. Energy Management Module:

A factory or field-installed module shall provide the following energy management capabilities: 4 to 20 mA signals for leaving fluid temperature reset, cooling set point reset or demand limit control; 2-point demand limit control (from 0 to 100%) activated by a remote contact closure; and discrete input for "Ice Done" indication for ice storage system interface.

14. BACnet[1] Communication Option:

Shall provide factory-installed communication capability with a BACnet MS/TP network. Allows integration with i-Vu® Open control system or a BACnet building automation system.

1. BACnet is a registered trademark of ASHRAE (American Society of Heating, Refrigerating, and Air-Conditioning Engineers).